RX60-RX72-RX84

Rotary Mower

Rev 02-14

Part No. 00785503PP

PARTS MANUAL

ALAMO INDUSTRIAL
1502 E. Walnut
Seguin, Texas 78155
830-372-9595

¡ATENCIÓN! LEA EL INSTRUCTIVO

Si No Lee Ingles, Pida Ayuda a Alguien Que Si Lo Lea Para Que le Traduzca las Medidas de Seguridad.

An Operator's Manual was shipped with the equipment in the Manual Canister. This Operator's Manual is an integral part of the safe operation of this machine and must be maintained with the unit at all times. READ, UNDERSTAND, and FOLLOW the Safety and Operation Instructions contained in this manual before operating the equipment. If the Operator's Manual is not with the equipment, contact your dealer or Alamo Industrial (800-356-6286) to obtain a Free copy before operating the equipment.

© 2014 Alamo Group, Inc.

BOLT TORQUE

Mounting procedures for mowers will require a significant amount of bolt nut and washer installation.

Frame and structure mounting bolts should be installed using *Red Loctite*, and torqued to the dry values listed in the torque chart based on the bolt size and hardness.

Other structures such as pump mounting bolts should be installed with *Blue Loctite* and torqued to the dry values indicated in the chart.

Bolt tightness should be completed with and checked with a suitable torque wrench.

Torque checks should be completed throughout the life of the mower in accordance with the maintenance chart provided in this manual.

Loose bolts on a frame or in a casting may be a result of:
- Vibration from the mower due to imbalance of the mower blades
- Pulled threads due to over tightening
- Distortion of the hole due to under tightening during installation

Bolts broken or sheared in the mounting structure or tractor may be the result of:
- Improper alignment of the Mounting Plate or Structure such that it is not sitting flat on the mating surface
- Distortion of the bolt due to over-tightening
- Under tightening of the bolts

Check the bolt torque during installation and prior to delivery with a suitable torque wrench.

Proper Torque Values for Standard Bolts

Bolt Diameter	Head Marking Three Lines Grade Five	Head Marking Six Lines Grade Eight
	Pound - Foot Value Dry	Pound - Foot Value Dry
1/4”	7	10
5/16”	15	22
3/8”	26	39
7/16”	42	60
1/2”	64	88
9/16”	100	134
5/8”	128	180
3/4”	227	320
7/8”	365	515
1”	547	772

To get Newton-Meters multiply pound-foot of torque by 1.356

Bolt Diameter	Proper Torque Values for Metric Bolts			
	4.6 Head Marking 4.6	8.8 Head Marking 8.8 or 9.8	10.9 Head Marking 10.9	12.9 Head Marking 12.9
	Pound - Foot Value Dry	Pound - Foot Value Dry	Pound - Foot Value Dry	Pound - Foot Value Dry
6mm	3	7	9	10
8mm	6.2	16	23	24
10mm	12	32	45	47
12mm	21	55	79	81
14mm	34	88	126	130
16mm	53	137	196	202
18mm	73	189	270	279
20mm	104	267	382	394
22mm	141	364	520	537
24mm	179	461	660	680
27mm	262	676	968	998
30mm	355	917	1312	1353

TO THE OWNER/OPERATOR/DEALER

All implements with moving parts are potentially hazardous. There is no substitute for a cautious, safe-minded operator who recognizes the potential hazards and follows reasonable safety practices. The manufacturer has designed this implement to be used with all its safety equipment properly attached to minimize the chance of accidents.

BEFORE YOU START!! Read the safety messages on the implement and shown in your manual.
Observe the rules of safety and common sense!

WARRANTY INFORMATION:

Read and understand the complete Warranty Statement found in this Manual. Fill out the Warranty Registration Form in full and return it within 30 Days. Make certain the Serial Number of the Machine is recorded on the Warranty Card and on the Warranty Form that you retain. The use of "will-fit" parts will void your warranty and can cause catastrophic failure with possible injury or death.

CHANGE PAGES

Date of Change	Page Number
04-03-2013	(EXAMPLE ONLY: ECN##### - chg pages 17, 23, 137)
04-03-2013	document release date
06-05-2013	chg pgs 26 & 30
01-17-2014	chg pgs 4
02-06-2014	chg pg 20

CHANGE PAGES

The following is a listing of pages that have been changed since the latest publication date for the overall document.

PARTS ORDERING GUIDE

The following instructions are offered to help eliminate needless delay and error in processing purchase orders for the equipment in this section.

1. The Parts Section is prepared in logical sequence and grouping of parts that belong to the basic machine featured in this manual. Part Numbers and Descriptions are given to help locate the parts and quantities required.

2. The Purchase Order must include the name and address of the person or organization ordering the parts, who should be charged, and if possible, the serial number of the machine for which the parts are ordered.

3. The Purchase Order must clearly list the quantity of each part, the complete and correct part number (be sure to include all periods), and the basic name of the part.

4. The Manufacturer reserves the right to substitute parts where applicable.

5. Some parts are unlisted items which are special production items not normally stocked and are subject to special handling. Request a quotation for such parts before sending a Purchase Order.

6. The Manufacturer reserves the right to change prices without prior notice.

Note: *Please refer to The Safety Section in the front of this Manual for the proper part number when ordering replacement safety decals.*

For maximum safety and to guarantee optimum product reliability, always use genuine Alamo Industrial Parts. The use of inferior replacement parts may cause premature or catastrophic failure which could result in serious injury or death. Direct any questions regarding parts to:

ALAMO® INDUSTRIAL
BUILT SHARPER®
An Alamo Group Company

ALAMO INDUSTRIAL
1502 E. Walnut
Seguin, Texas 78155
830-379-1480

©2013 Alamo Group Inc.

PART NAME INDEX

A-FRAME QUICK HITCH ASSEMBLY - RX60, RX72 4
A-FRAME QUICK HITCH ASSEMBLY - RX84 5
A-FRAME QUICK HITCH ATTACHMENT - RX60, RX72 6
A-FRAME QUICK HITCH ATTACHMENT - RX84 7
AXLE ASSEMBLY PULL TYPE - RX84 8
BLADE PAN ASSEMBLY - RX60 10
BLADE PAN ASSEMBLY - RX72 11
BLADE PAN ASSEMBLY - RX84 12
CASTER WHEEL AND HUB ASSEMBLY 13
CHAIN GUARD ASSEMBLY - DOUBLE FRONT RX84 14
CHAIN GUARD ASSEMBLY - DOUBLE REAR RX84 15
CHAIN GUARD ASSEMBLY - FRONT 16
CHAIN GUARD ASSEMBLY - REAR 17
DEFLECTOR ASSEMBLY - FRONT 18
DEFLECTOR ASSEMBLY - REAR 19
DRIVELINE ASSEMBLY CV 20
DRIVELINE ASSEMBLY LIFT - RX60, RX72, RX84 22
DRIVELINE ASSEMBLY LIFT CAT-5 - RX84 23
DRIVELINE JACKSHAFT ASSEMBLY - RX84 24
GEARBOX ASSEMBLY - RX60, RX72 - SERIAL 11616 - BELOW 25
GEARBOX ASSEMBLY - RX60, RX72 - SERIAL 11617 - CURRENT 27
GEARBOX ASSEMBLY - RX84 - SERIAL 10022 - BELOW 29
GEARBOX ASSEMBLY - RX84 - SERIAL 10023 - CURRENT 31
GEARBOX ATTACHMENT RX60, RX72 SERIAL 11616-BELOW, & RX84 33
GEARBOX ATTACHMENT RX72 SERIAL# 11617-CURRENT 34
HYDRAULIC CYLINDER 35
SKID SHOE ASSEMBLY 36
SLIP CLUTCH ASSEMBLY - RX60, RX72, RX84 37
SLIP CLUTCH ASSEMBLY CAT-5 - RX84 38
TAILWHEEL ASSEMBLY - DUAL RX84 39
TAILWHEEL ASSEMBLY - RX60, RX72 40
TAILWHEEL ASSEMBLY - RX84 41
TAILWHEEL HUB ASSEMBLY 42
TONGUE ASSEMBLY - RX84 43

©2014 Alamo Group Inc.

A-FRAME QUICK HITCH ASSEMBLY - RX60, RX72

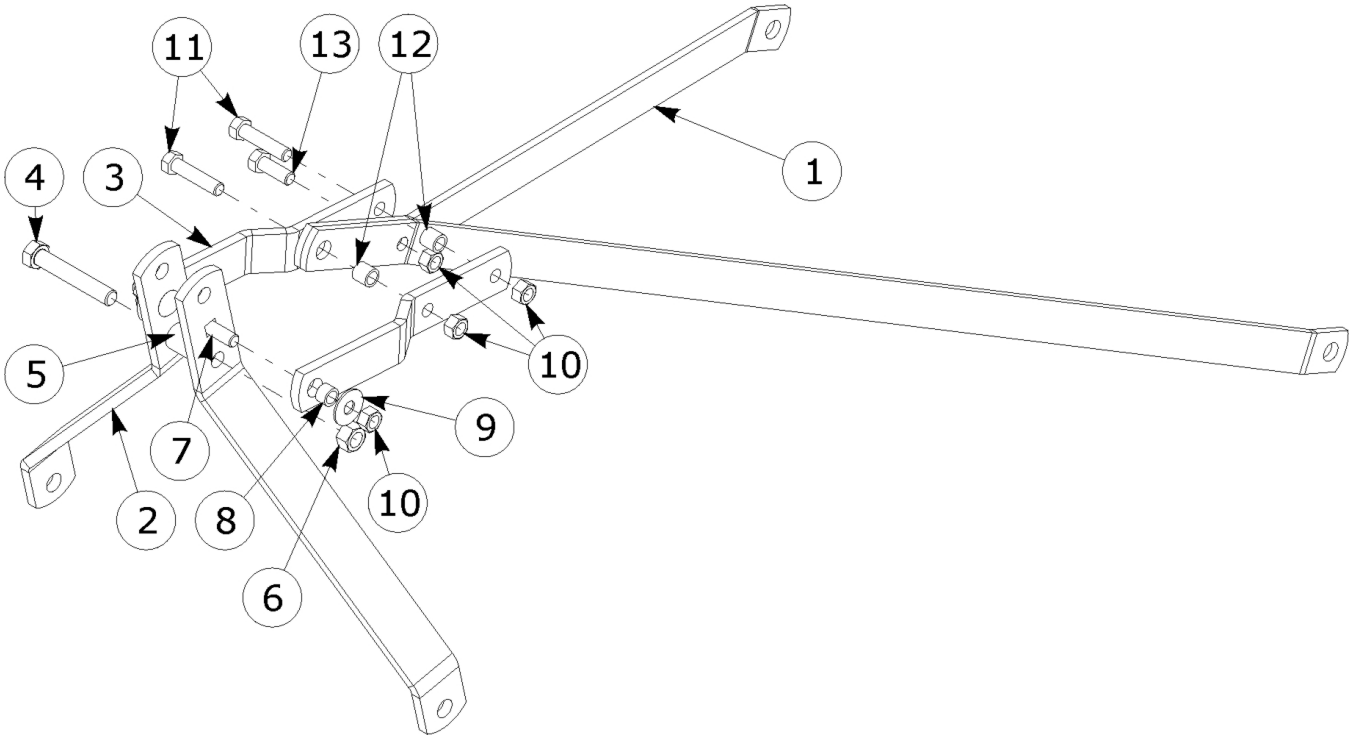

ITEM	PART NO.	QTY.	DESCRIPTION
1	00780585	-	FLAT,REAR BRACE - RX72
	00781038	-	FLAT,REAR BRACE - RX60
2	00788375	-	FLAT, A-FRAME - RX72
	00780563	-	FLAT, A-FRAME, QUICK HITCH - RX60
3	00780549	-	BAR, BRACE - RX72
	00780603	-	BAR, BRACE - RX60
4	00009500	-	BOLT-HEX 3/4 NC 4-1/2 PL5
5	0758550030	-	SPACER
6	00037200	-	NUT TOPLOCK 3/4 NC PLC
7	2101120	-	CARB 5/8 NC X 2-1/2 PL5 - RX72
	4905	-	CARB 5/8-11 NC 2 PL5 - RX60
8	0732020020	-	BUSHING - RX72
	523012	-	BUSHING, ORDER 780 MIN HT - RX60
9	00756077	-	WASHER,5/8 HARDENED
10	00695100	-	NUT,TOPLOCK 5/8 NC PLC
11	02845600	-	HEXB 5/8 NC 3 PL5 - RX72
	00703200	-	HHCS 5/8 NC 2 3/4 PL5 - RX60
12	00780592	-	BUSHING, A-FRAME TOGGLE
13	02845500	-	HEXB 5/8 NC 2 PL5

00785503P - RX60 - RX72 - RX84 (01-10)_02-14

A-FRAME QUICK HITCH ASSEMBLY - RX84

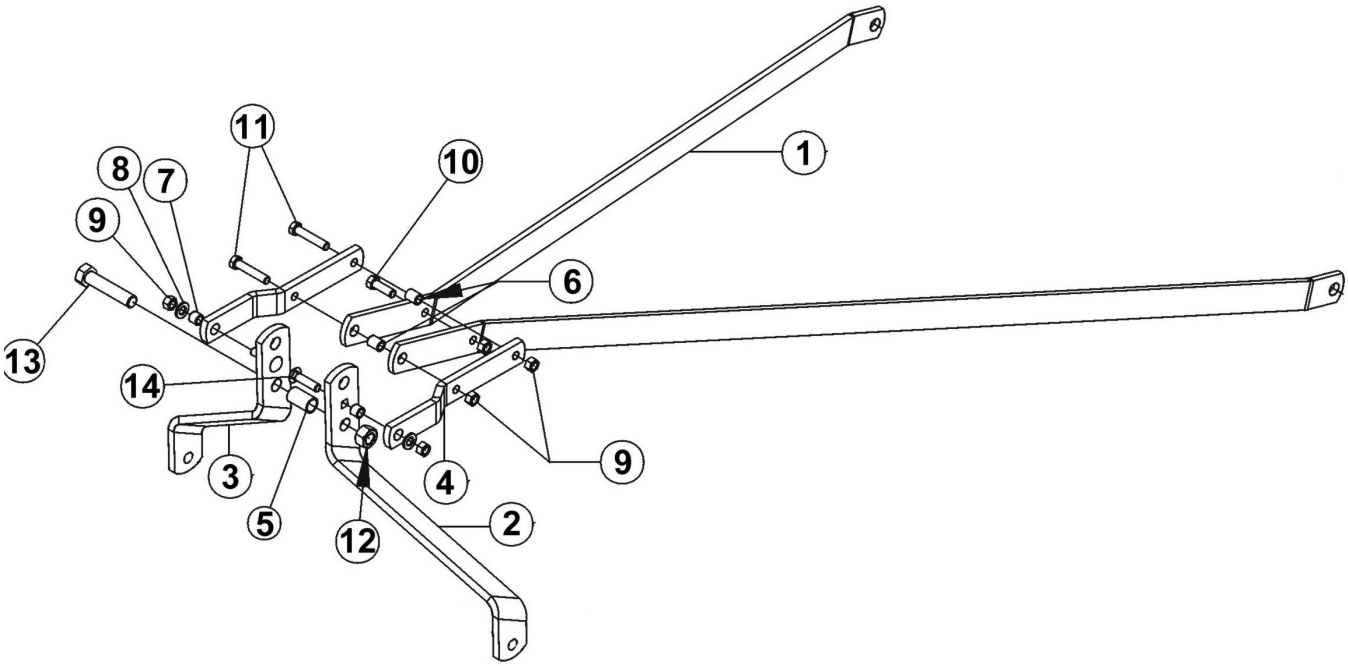

ITEM	PART NO.	QTY.	DESCRIPTION
1	00781069	2	FLAT, REAR BRACE
2	00781411	1	FLAT, A-FRAME LH
3	00781410	1	FLAT, A-FRAME RH
4	00781117	2	FLAT, QUICK HITCH TOGGLE
5	0758550031	1	BUSHING
6	00761199	2	SPACER TUBE
7	0732020020	4	BUSHING
8	00756077	10	5/8 HARDENED WASHER
9	00695100	13	NUT,TOPLOCK 5/8 NC PLC
10	02845500	1	BOLT, 5/8 X 2
11	00600700	2	HEXB 5/8 NC 3-1/4 PL5
12	02030300	1	NUT, 1" TOPLOCK
13	00750479	1	HEXB 1NC 4-3/4 PL5
14	2101120	2	CARB 5/8 X 2-1/2

00785503P - RX60 - RX72 - RX84 (01-10)_02-14

©2014 Alamo Group Inc.

A-FRAME QUICK HITCH ATTACHMENT - RX60, RX72

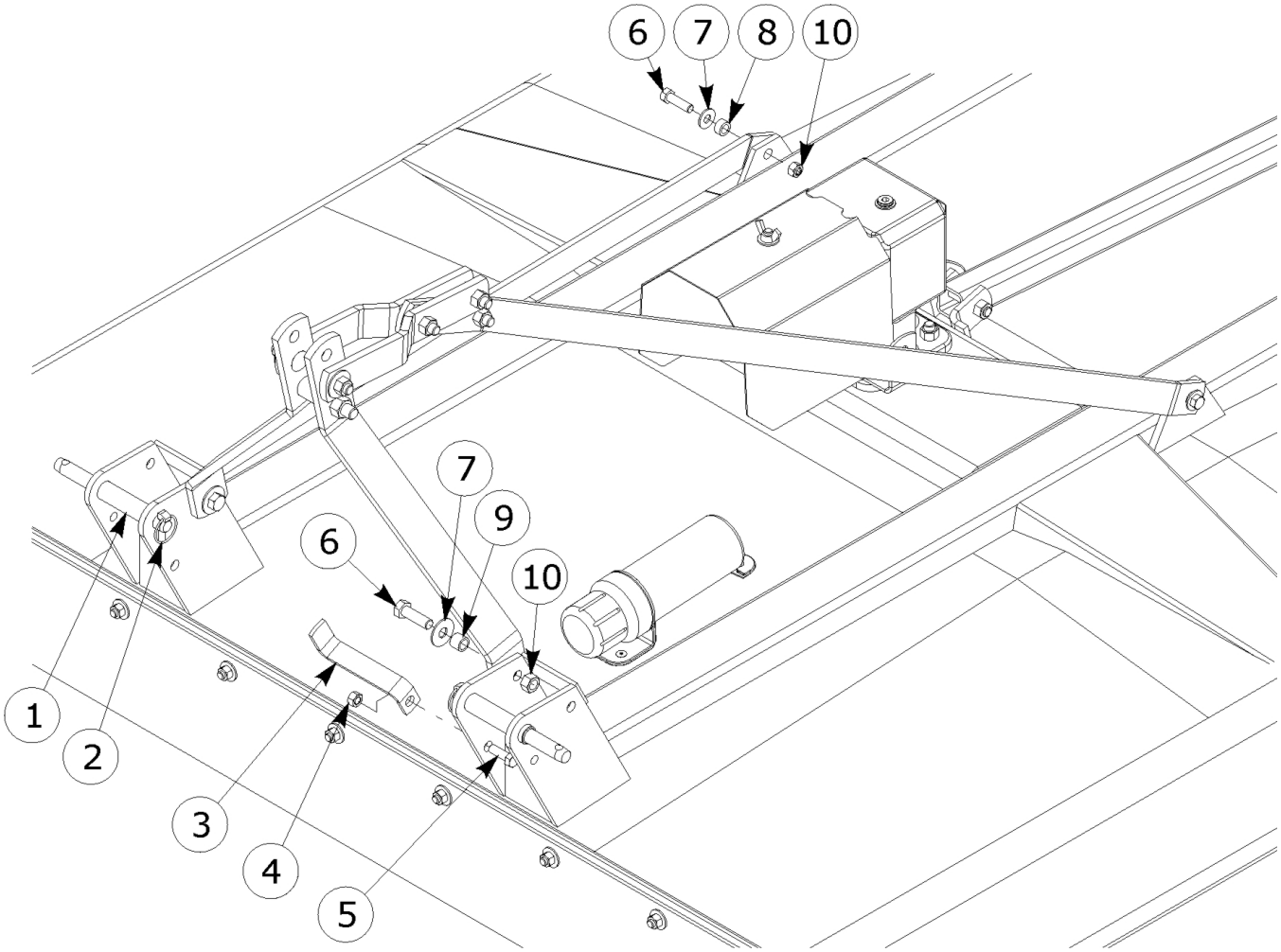

ITEM	PART NO.	QTY.	DESCRIPTION
1	00775243	2	PIN WRIST CAT 1&2
2	2196	2	CLIP (LYNCH PIN), 13/32 DIA.
3	00780663	1	FLAT, DRIVELINE STORAGE
4	00001800	1	LOCKNUT TLM 1/2 NC PLC
5	00748823	1	HHCS 1/2-13UNC 1-1/2 PL5
6	02845500	4	HEXB 5/8 NC 2 PL5 - RX72
	00695100	4	LOCKNUT TOPLOCK 5/8NC PLC - RX60
7	00756077	4	WASHER,5/8 HARDENED
8	00761724	2	BUSHING HITCH
9	0732020020	2	BUSHING - RX72
	523012	2	BUSHING, ORDER 780 MIN HT - RX60
10	00695100	2	NUT,TOPLOCK 5/8 NC PLC
11	00785238	2	BUSHING,CAT. II QUICK HITCH

00785503P - RX60 - RX72 - RX84 (01-10)_02-14

A-FRAME QUICK HITCH ATTACHMENT - RX84

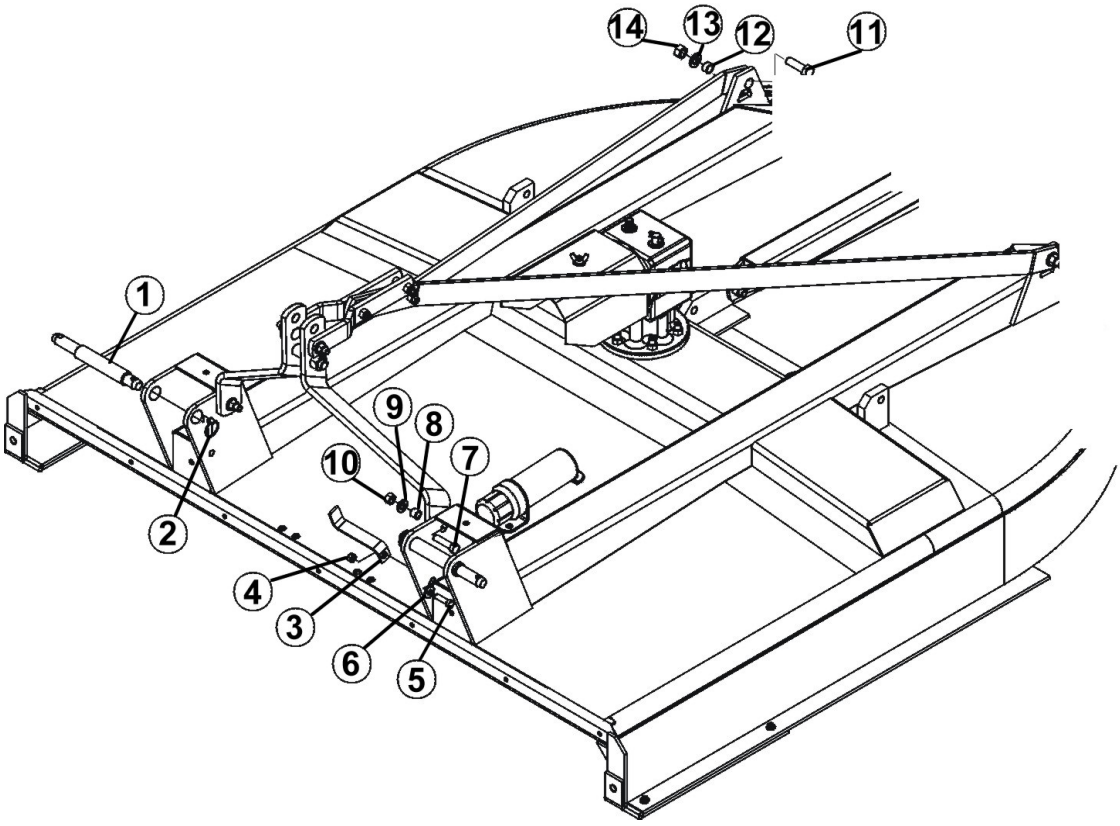

ITEM	PART NO.	QTY.	DESCRIPTION
1	69141	2	PIN, HITCH CAT II & III
2	2196	2	CLIP (LYNCH PIN), 13/32 DIA.
3	00780663	1	FLAT, DRIVELINE STORAGE
4	00001800	1	LOCKNUT TLM 1/2 NC PLC
5	00749130	1	HHCS 1/2-13UNC 1-3/4 PL5
6	00002700	2	FLATWASHER 1/2 PL STD
7	00750952	2	HEXB,5/8NC X 2-1/2,ZP,GRD5
8	0732020020	2	BUSHING
9	00756077	2	WASHER,5/8 HARDENED
10	00695100	2	NUT,TOPLOCK 5/8 NC PLC
11	00037100	2	HEXB 3/4 NC 2-1/2 PL5
12	511016	2	BUSHING YDP
13	5312316	2	WASHER, 3/4
14	00037200	2	NUT 3/4-NC TOPLOCK GRC PL

00785503P - RX60 - RX72 - RX84 (01-10)_02-14

©2014 Alamo Group Inc.

AXLE ASSEMBLY PULL TYPE - RX84

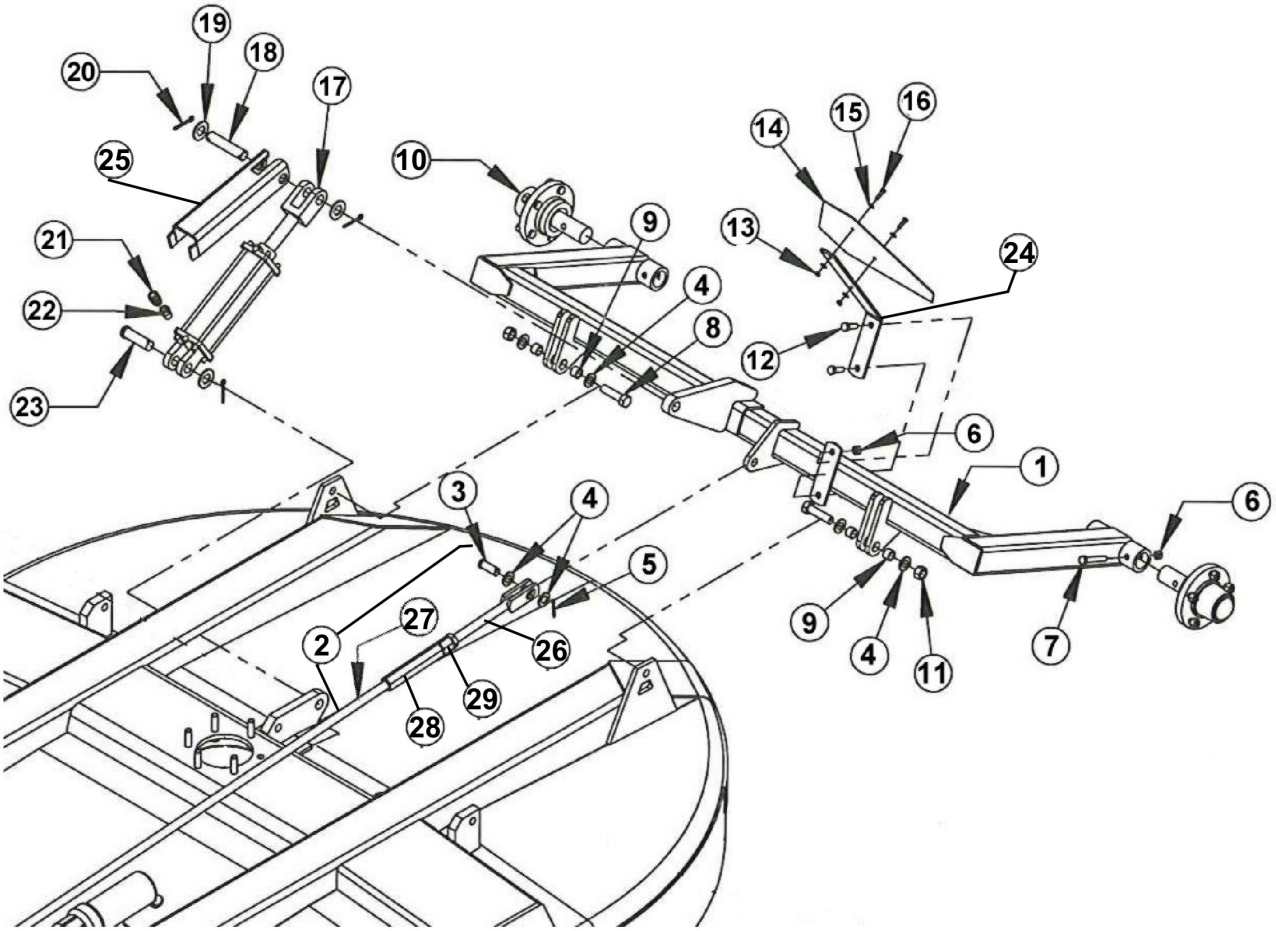

00785503P - RX60 - RX72 - RX84 (01-10)_02-14

AXLE ASSEMBLY PULL TYPE - RX84

Continued...

ITEM	PART NO.	QTY.	DESCRIPTION
1	00781149	1	WDMT, AXLE - 284
2	00781178	1	ASY, LEVEL ROD - 284
3	651102	2	PIN, DRILLED
4	00002701	2	FLATWASHER, 3/4, TYPE AW, ZP
5	00755153	2	PIN, COTTER 3/16 X 1-1/2 PLATED
6	00001800	2	LOCKNUT TLM 1/2 NC PLC
7	00764375	2	HHCS 1/2NC X 3-1/4 PL5
8	00007800	2	HEXB 3/4 NC 3 PL5
9	511016	4	BUSHING
10	00775616A	2	ASY,HUB & SPINDLE
11	00037200	2	NUT 3/4-NC TOPLOCK GRC PL
12	00748823	2	HHCS, 1/2 - 13NC X 1-1/2 PL5
13	02959924	2	NUT, 1/4" NC
14	03200347	1	EMBLEM, SMV
15	00024100	4	1/4" FLATWASHER
16	10058000	2	HHCS 1/4 NC 1 PL5
17	8727A	1	HYDRAULIC CYLINDER
18	103266	1	CYLINDER PIN
19	02822500	2	FLATWASHER 1 PL STD
20	00606000	4	PIN, COTTER 3/16 X 2
21	7329	1	ADAPTER, HYD, STGHT
22	0652141311	1	STRAIGHT ADAPTER 8MP-8MJ
23	8354	1	PIN, HYD. CYLINDER
24	00785646	1	SMV BRACKET
25	00777963	1	TRANSPORT LOCK PLATE
26	00758643	1	ROD, CONTROL
27	00781177	1	WELDMENT LONG LEVEL ROD
28	00778159	1	NUT, 9" ADJUSTING
29	5C1490	1	HEXNUT, 7/8 JAM ZP

©2014 Alamo Group Inc.

BLADE PAN ASSEMBLY - RX60

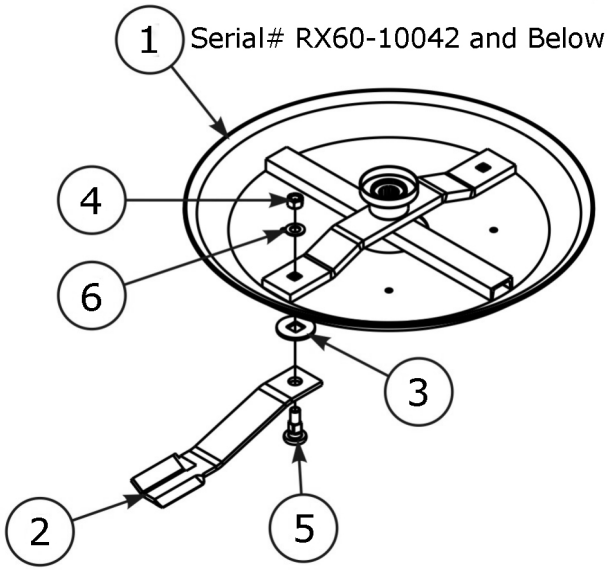

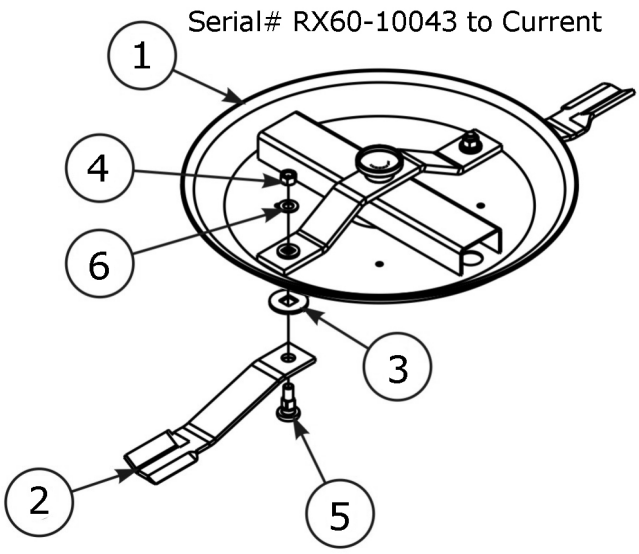

ITEM	PART NO.	QTY.	DESCRIPTION
1	00781388	1	WDMT,BLADE PAN (SERIAL# RX60-10042 AND BELOW)
	00786797	1	WDMT,BLADE PAN (SERIAL# RX60-10043 TO CURRENT)
2	00780882	2	BLADE, CCW FAN 22-1/2 CTR-TIP 260
	0652010030	2	BLADE, FLAT
	00757830	2	BLADE, HIGH SUCTION TWISTED
3	00780945	2	WASHER 1-5/64 SQ HOLE X 3 OD 260
4	5GL16140	2	LOCKNUT 1 -14 LH TLN PL - 260
5	571044	2	BOLT SHOULDER - 260
6	571045	2	WASHER - HARDENED - 260

©2014 Alamo Group Inc.

BLADE PAN ASSEMBLY - RX72

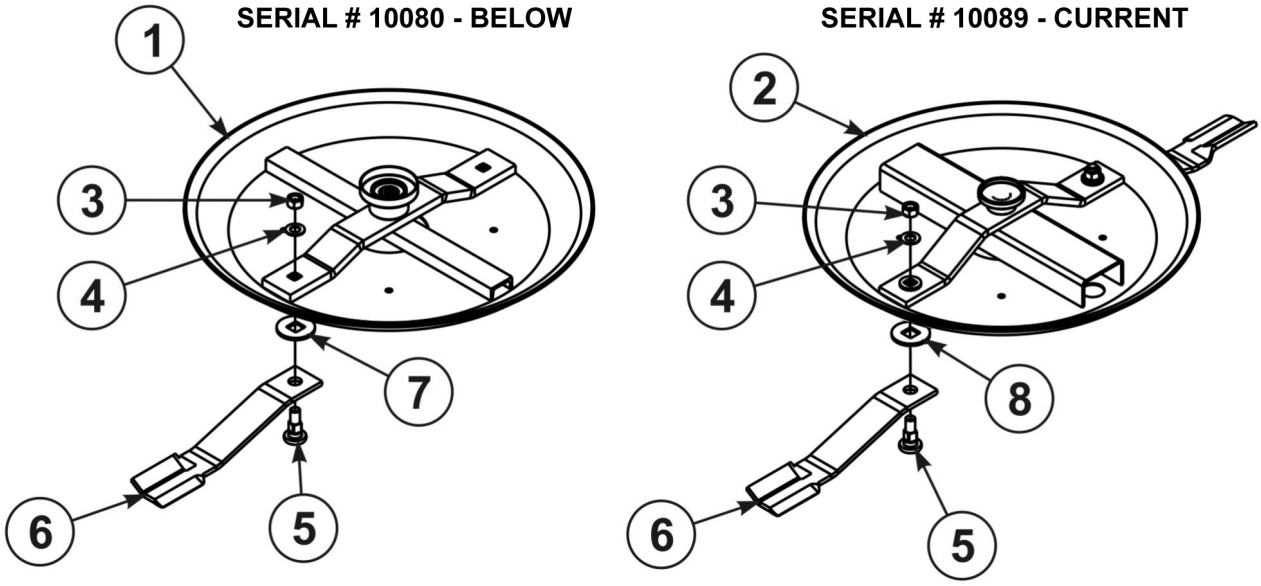

ITEM	PART NO.	QTY.	DESCRIPTION
1	00780622	1	WLDMT, BLADE PAN 272 (SERIAL# 10080-BELOW)
2	00786485	1	WLDMT, BLADE PAN 272 (SERIAL# 10089-CURRENT)
3	5GL16140	4	LOCKNUT 1 -14 LH TLN PL
4	571045	4	WASHER, HARDENED
5	571044	4	BOLT SHOULDER
6	00757830	2	BLADE, HIGH SUCTION TWISTED
	0652010030	2	BLADE, FLAT
	00780882	2	BLADE, CCW FAN 22-1/2 CTR-TIP 260 & 272
7	00780945	4	WASHER 1-5/64 SQ HOLE X 3 OD
8	0656150200	4	WASHER,SQ HOLE

©2014 Alamo Group Inc.

BLADE PAN ASSEMBLY - RX84

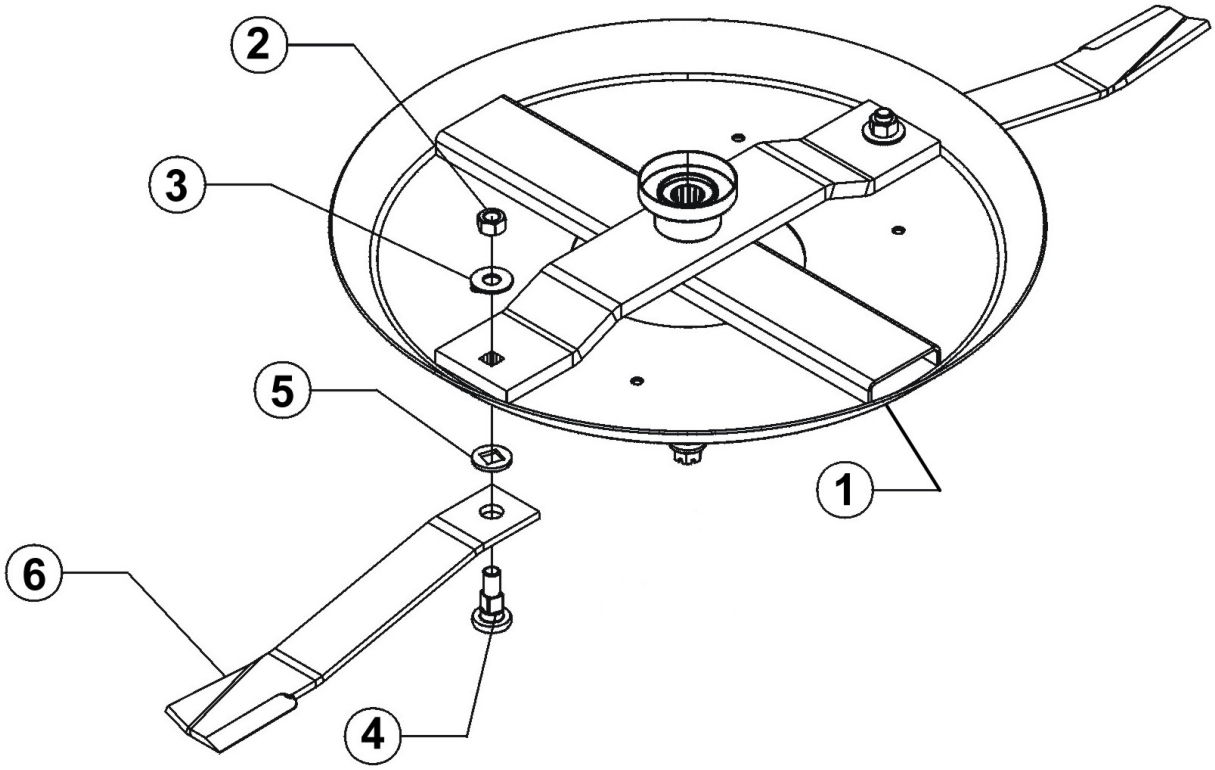

ITEM	PART NO.	QTY.	DESCRIPTION
1	00786649	1	WELDMENT, BLADE CARRIER
2	5GL16140	2	LOCKNUT
3	571045	2	WASHER 1 STRUCURAL
4	571044	2	BOLT, SHOULDER BLADE
5	00778047	2	BLADE WASHER
6	0582010330	2	BLADE, CCW FAN ROTARY MOWER
	582013A	2	BLADE, FLAT
	00757833	2	BLADE, HIGH SUCTION TWISTED

00785503P - RX60 - RX72 - RX84 (01-10)_02-14

©2014 Alamo Group Inc.

CASTER WHEEL AND HUB ASSEMBLY

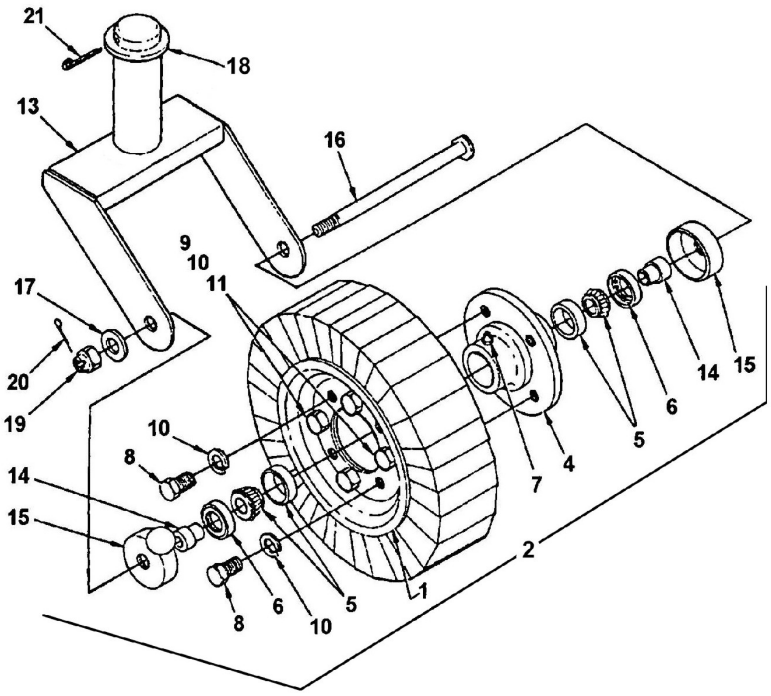

ITEM	PART NO.	QTY.	DESCRIPTION
	00776220	1	CASTER WHEEL AND HUB ASSEMBLY
1	373024H	1	TIRE WHEEL ASSEMBLY
2	00780238	1	TAILWHEEL HUB ASSEMBLY INCLUDES ALL ITEMS EXCEPT 1, 13, 21, & 18
4	00776214	1	HUB
5	00776213	2	BEARING CONE & CUP
6	00776219	2	OIL SEAL
7	00772082	1	GREASE FITTING (THREADED)
8	00776216	4	BOLT
9	7A6166	4	BOLT
10	00776215	4	FLATWASHER
11	00012101	4	LOCKWASHER
12	00013901	4	NUT
13	0585020210A	1	CASTER FORK WELDMENT
14	00772017	2	BUSHING
15	00772018	2	DUST CAP
16	00776211	1	SPINDLE BOLT
17	02822500	1	WASHER
18	15B2400	1	FLATWASHER
19	00776212	1	CASTELLATED NUT
20	00771620	1	COTTER PIN
21	00758899	1	COTTER PIN

©2014 Alamo Group Inc.

CHAIN GUARD ASSEMBLY - DOUBLE FRONT RX84

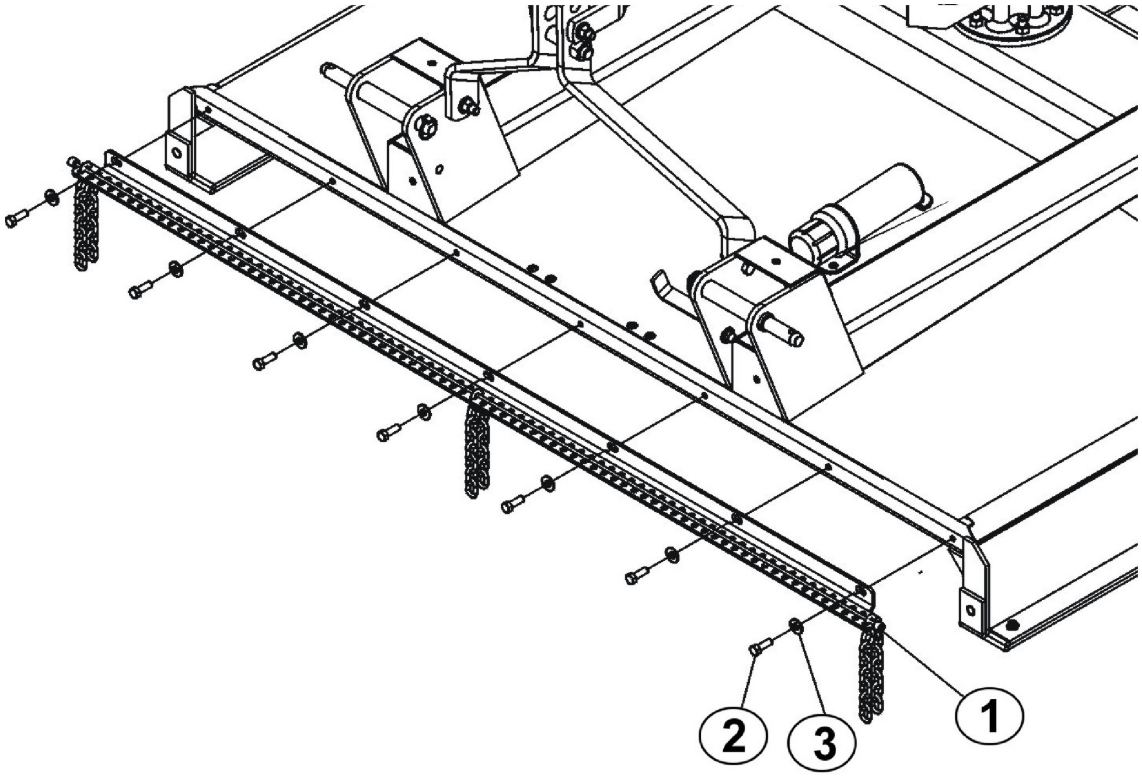

ITEM	PART NO.	QTY.	DESCRIPTION
1	00785248	1	ASY,FRONT DOUBLE CG-RX84
2	00748823	7	HHCS 1/2-13UNC 1-1/2 PL5
3	00002700	7	FLATWASHER 1/2 PL STD

00785503P - RX60 - RX72 - RX84 (01-10)_02-14

CHAIN GUARD ASSEMBLY - DOUBLE REAR RX84

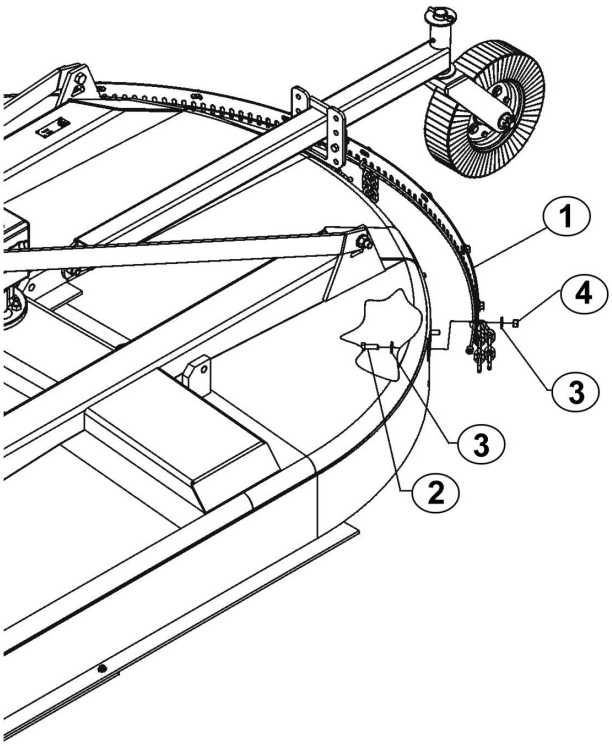

ITEM	PART NO.	QTY.	DESCRIPTION
1	00785249	1	ASY,REAR DOUBLE CG-RX84
2	00748823	9	HHCS 1/2-13UNC 1-1/2 PL5
3	00002700	18	FLATWASHER 1/2 PL STD
4	00001800	9	LOCKNUT TLM 1/2 NC PLC

00785503P - RX60 - RX72 - RX84 (01-10)_02-14

©2014 Alamo Group Inc.

CHAIN GUARD ASSEMBLY - FRONT

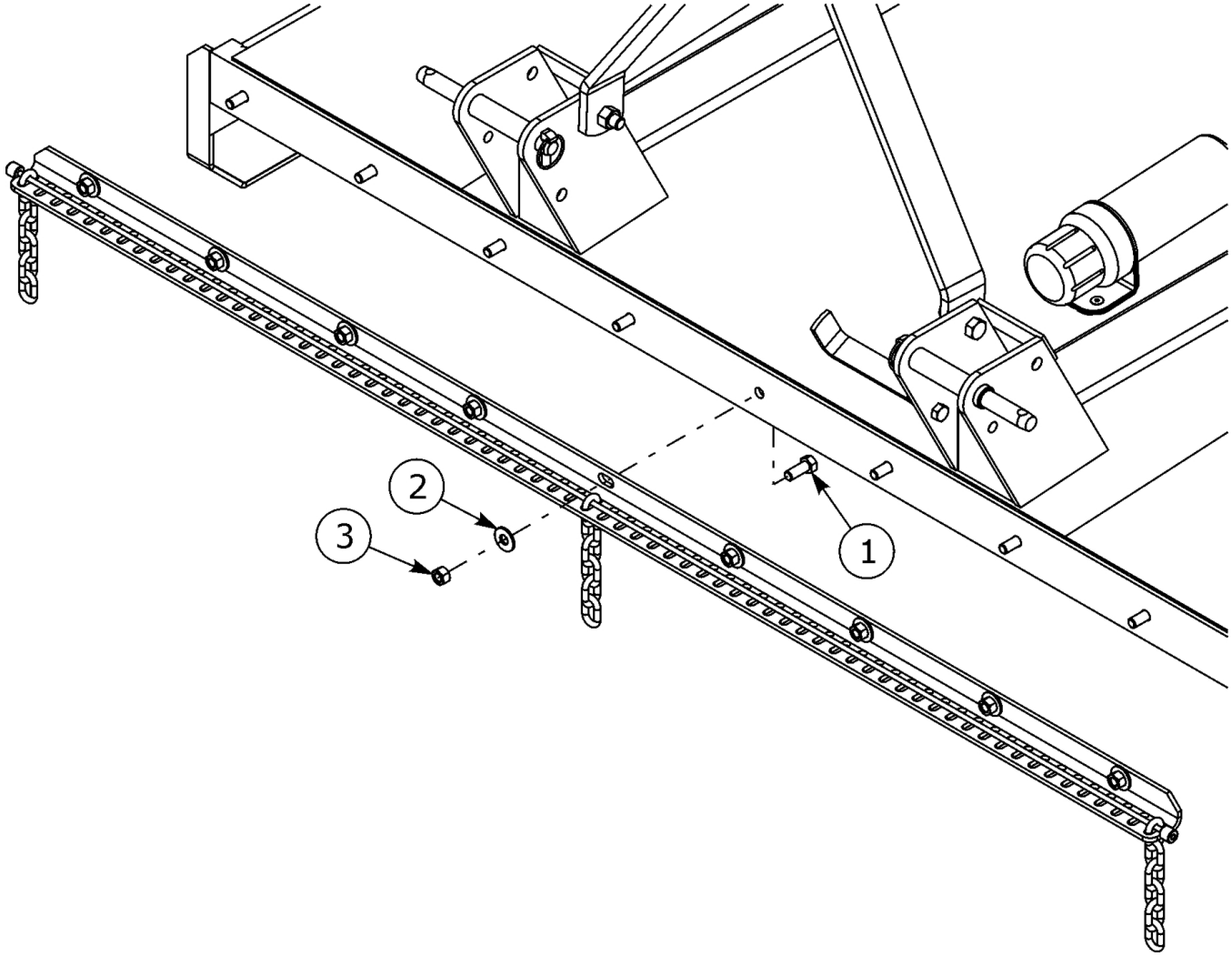

ITEM	PART NO.	QTY.	DESCRIPTION
1	00781209	1	FLAT, FRONT C.G. BRACKET - RX72
	00781249	1	FLAT, FRONT C.G. BRACKET - RX60
	00781265	1	FLAT, FRONT C.G. BRACKET - RX84
2	00002700	5	FLATWASHER 1/2 PL STD - RX60 RX72
	00002700	7	FLATWASHER 1/2 PL STD RX84
3	00748823	5	HHCS 1/2-13UNC 1-1/2 PL5 - RX60 RX72
	00748823	7	HHCS 1/2-13UNC 1-1/2 PL5 - RX84

00785503P - RX60 - RX72 - RX84 (01-10)_02-14

©2014 Alamo Group Inc.

CHAIN GUARD ASSEMBLY - REAR

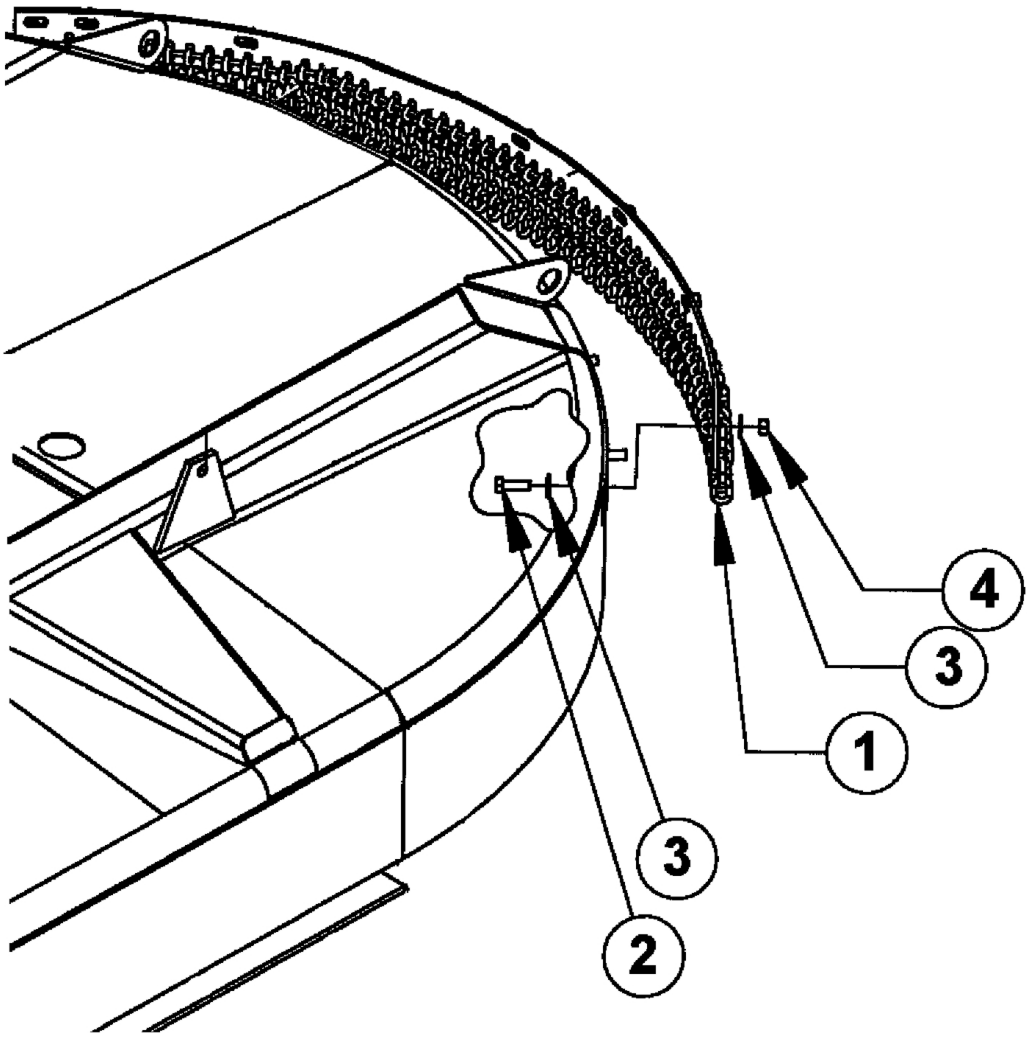

ITEM	PART NO.	QTY.	DESCRIPTION
1	00785229	1	BRACKET,REAR CHAIN GUARD - RX72
	00785230	1	ASY,REAR CHAIN GUARD - RX60
	00781264	1	BRACKET,REAR CHAIN GUARD - RX84
2	00748823	9	HHCS 1/2-13UNC 1-1/2 PL5 - RX84 RX72
	00748823	7	HHCS 1/2-13UNC 1-1/2 PL5 - RX60
3	00002700	18	FLATWASHER 1/2 PL STD - RX84 RX72
	00002700	14	FLATWASHER 1/2 PL STD - RX60
4	00001800	9	LOCKNUT TLM 1/2 NC PLC - RX84 RX72
	00001800	7	LOCKNUT TLM 1/2 NC PLC - RX60

00785503P - RX60 - RX72 - RX84 (01-10)_02-14

©2014 Alamo Group Inc.

DEFLECTOR ASSEMBLY - FRONT

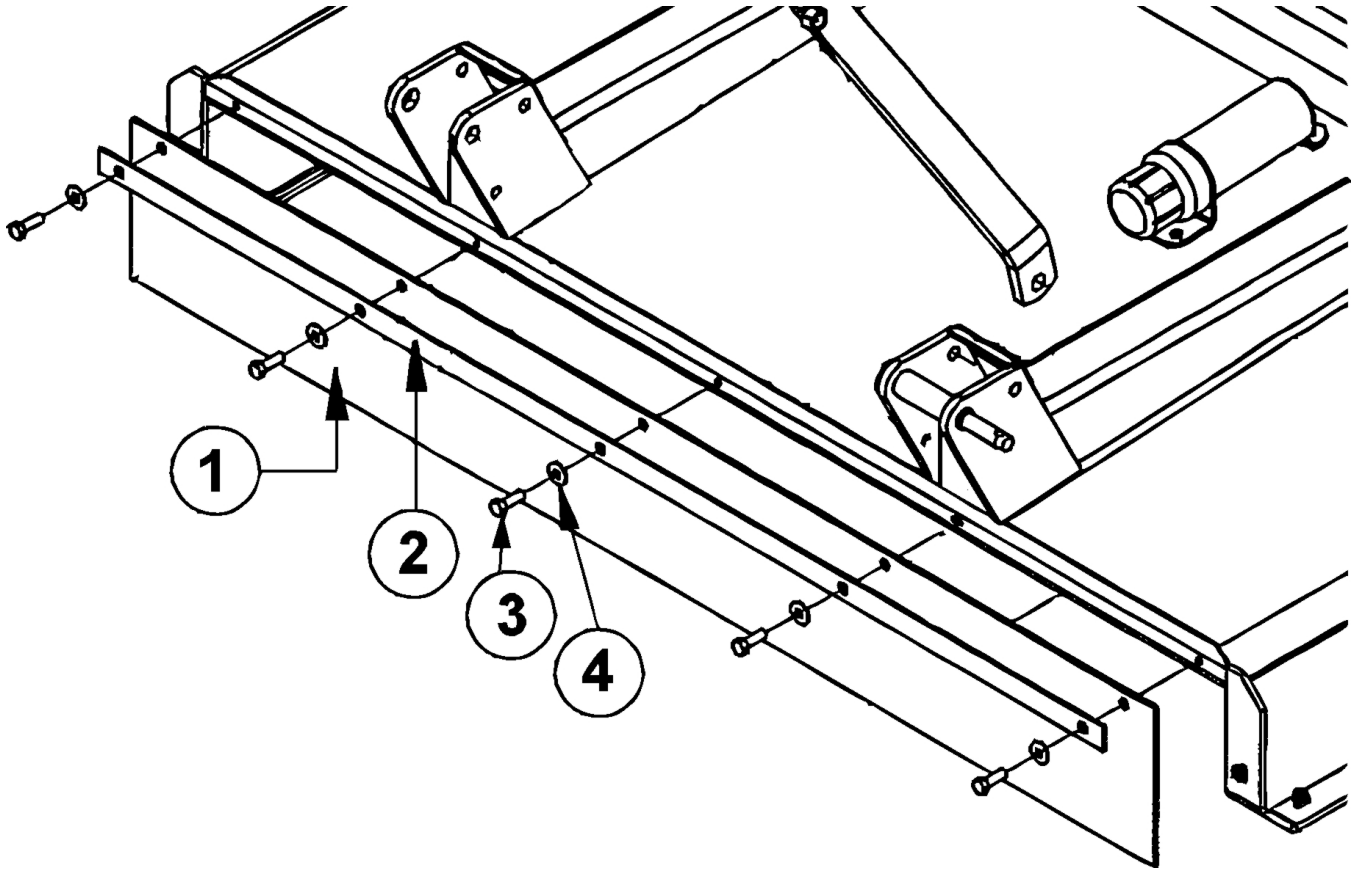

ITEM	PART NO.	QTY.	DESCRIPTION
1	00780879	1	PANEL, FRONT RUBBER DEFLECTOR - RX72
	00781039	1	PANEL, FRONT RUBBER DEFLECTOR - RX60
	00781119	1	PANEL, FRONT DEFLECTOR - RX84
2	00780881	1	FLAT, DEFLECTOR STRAP - RX72
	00781041	1	FLAT, DELFECTOR STRAP - RX60
	00781144	1	FLAT, FRONT DEFLECTOR STRAP - RX84
3	00748823	5	HHCS 1/2-13UNC 1-1/2 PL5 - RX60 RX72
	00748823	7	HHCS 1/2-13UNC 1-1/2 PL5 - RX84
4	00002700	5	FLATWASHER 1/2 PL STD - RX60 RX72
	00002700	7	FLATWASHER 1/2 PL STD - RX84

00785503P - RX60 - RX72 - RX84 (01-10)_02-14

©2014 Alamo Group Inc.

DEFLECTOR ASSEMBLY - REAR

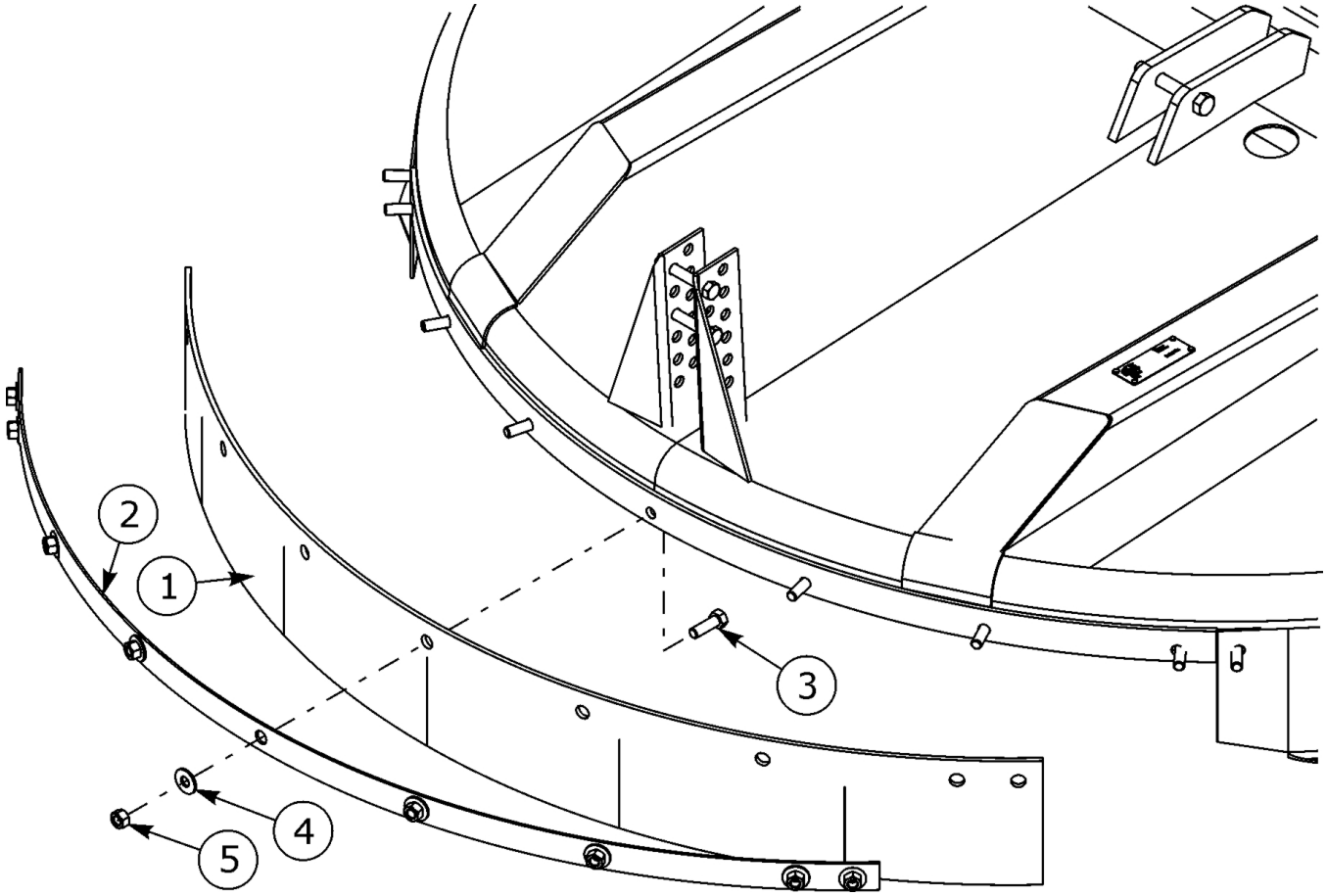

ITEM	PART NO.	QTY.	DESCRIPTION
1	00781231	1	PANEL, REAR RUBBER DEFLECTOR - RX72
	00781229	1	PANEL, REAR RUBBER DEFLECTOR - RX60
	00781079	1	PANEL, REAR DEFLECTOR - RX84
2	00781232	1	FLAT, REAR DEFLECTOR STRAP - RX72
	00781230	1	FLAT, REAR DEFLECTOR STRAP - RX60
	00781131	1	FLAT, REAR DEFLECTOR STRAP - RX84
3	00748823	9	HHCS 1/2-13UNC 1-1/2 PL5 - RX72 RX84
	00748823	7	HHCS 1/2-13UNC 1-1/2 PL5 - RX60
4	00002700	18	FLATWASHER 1/2 PL STD - RX72 RX84
	00002700	14	FLATWASHER 1/2 PL STD - RX60
5	00001800	9	LOCKNUT TLM 1/2 NC PLC - RX72 RX84
	00001800	7	LOCKNUT TLM 1/2 NC PLC - RX60

00785503P - RX60 - RX72 - RX84 (01-10)_02-14

©2014 Alamo Group Inc.

DRIVELINE ASSEMBLY CV

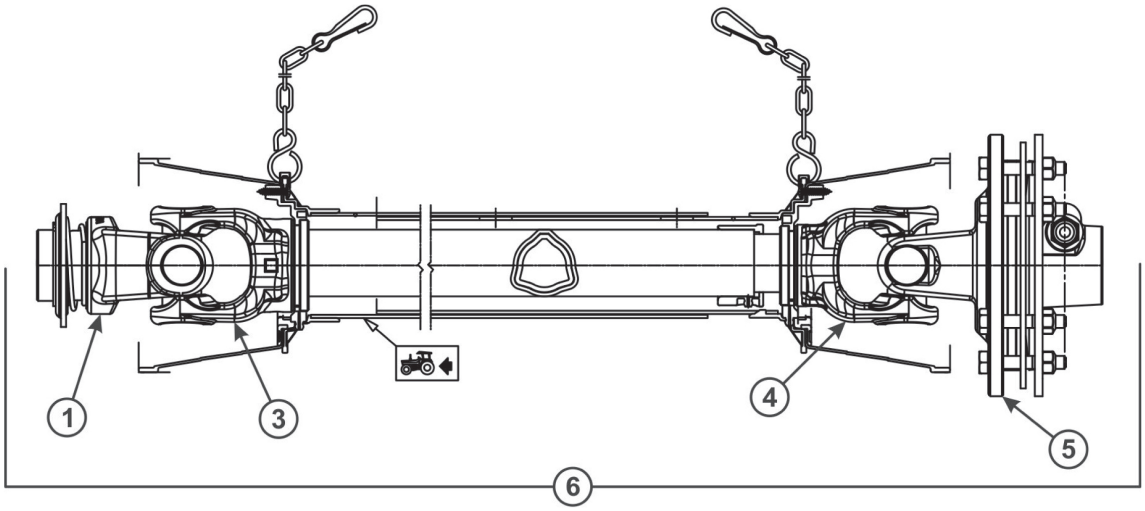

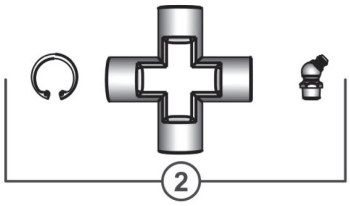

00785503P - RX60 - RX72 - RX84 (01-10)_02-14

Continued...

ITEM	PART NO.	QTY.	DESCRIPTION
0	00787474	1	DRIVELINE 540 W/ CLUTCH
1	50050660	1	YOKE 1 3/8: -6 SPL BALL COLL
2	001450	2	CROSS & BEARING KIT
3	0921000165	2	YOKE OUTER TUBE
4	66109	1	INNER TUBE YOKE
5	----------	1	FRICTION CLUTCH
---------	00787481	1	SHIELD COMPLETE

©2014 Alamo Group Inc.

DRIVELINE ASSEMBLY LIFT - RX60, RX72, RX84

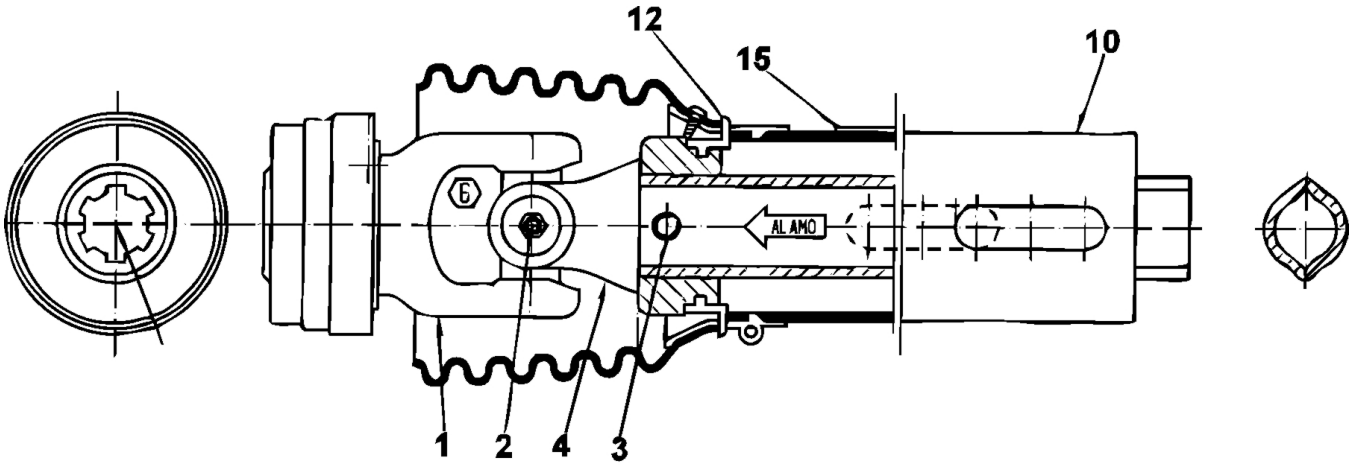

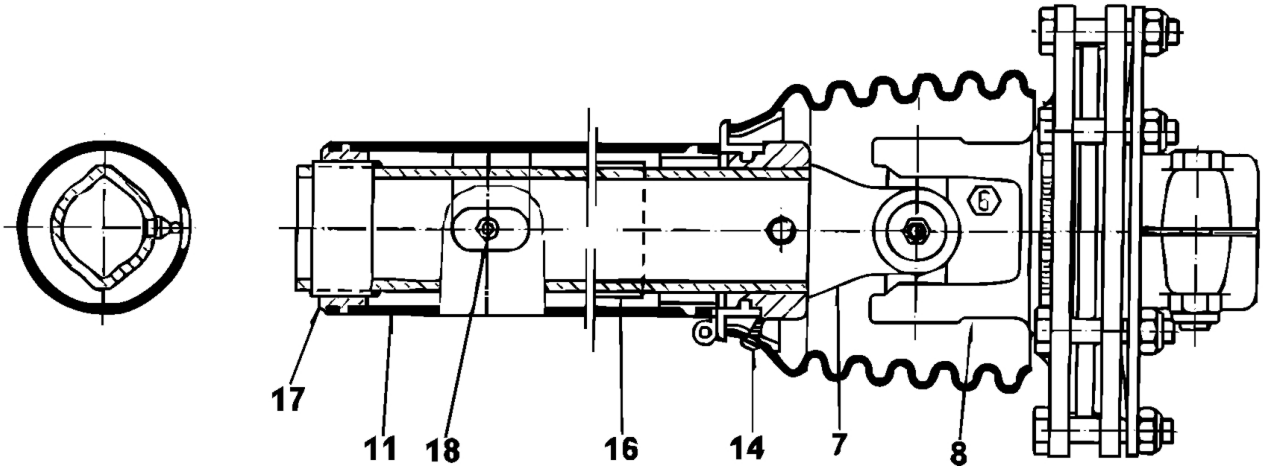

ITEM	PART NO.	QTY.	DESCRIPTION
	00781390	1	DRIVELINE CAT4 1-3/4-20 SPLINE
1	00779516	1	YOKE 1 3/8" -6SPL
2	00779517	2	CROSS & BEARING KIT
3	00756934	2	PIN,ROLL 10 X 80
4	8982	1	YOKE INBOARD
7	8387	1	INBOARD YOKE
8	00779512	1	FRICTION CLUTCH
12	8393	2	BEARING RING
14	00759217	2	SCREW 1/2 LG #8 PAN
15	00756005	1	DECAL-ROTATING DRIVELINE
16	00756004	1	DECAL-SHIELD MISSING
17	8974	1	SUPPORT BEARING
18	1416601	1	ZERK
	00779533	1	SHIELD KIT INCLUDES ITEMS 10, 11, 12, 14 & 15

00785503P - RX60 - RX72 - RX84 (01-10)_02-14

©2014 Alamo Group Inc.

DRIVELINE ASSEMBLY LIFT CAT-5 - RX84

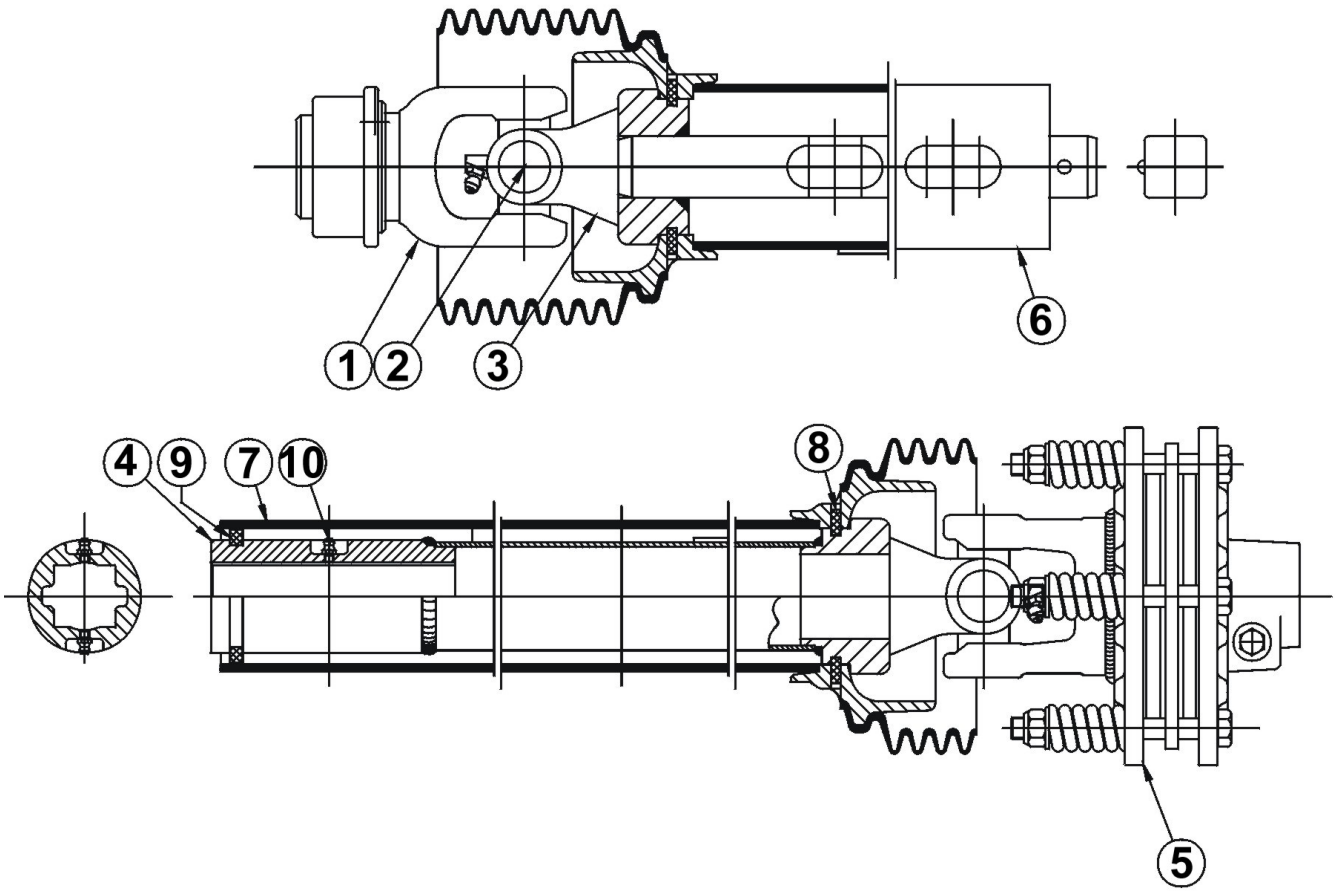

ITEM	PART NO.	QTY.	DESCRIPTION
	00781406	1	ASY,DRIVELINE W/CLUTCH,540RPM
1	W821A	1	YOKE 44 1-3/8-6 SLID
2	W840	2	KIT,CROSS SAME AS P
3	W816F	1	YOKE SHAFT PAINT BLA
4	00775344	1	YOKE, I.B. TUBE & SLEEVE W.A.
5	00779357	1	COMPT. CLUTCH HUB 1440 1350MM
6	00775345	1	OUTER SHIELD TUBE ASSY
7	00775346	1	INNER SHIELD TUBE ASSY
8	00775347	1	SHIELD BEARING
9	00775348	4	SUPPORT BEARING
10	00752670	2	FITTING,GREASE STRAIGHT 1/4-28

00785503P - RX60 - RX72 - RX84 (01-10)_02-14

DRIVELINE JACKSHAFT ASSEMBLY - RX84

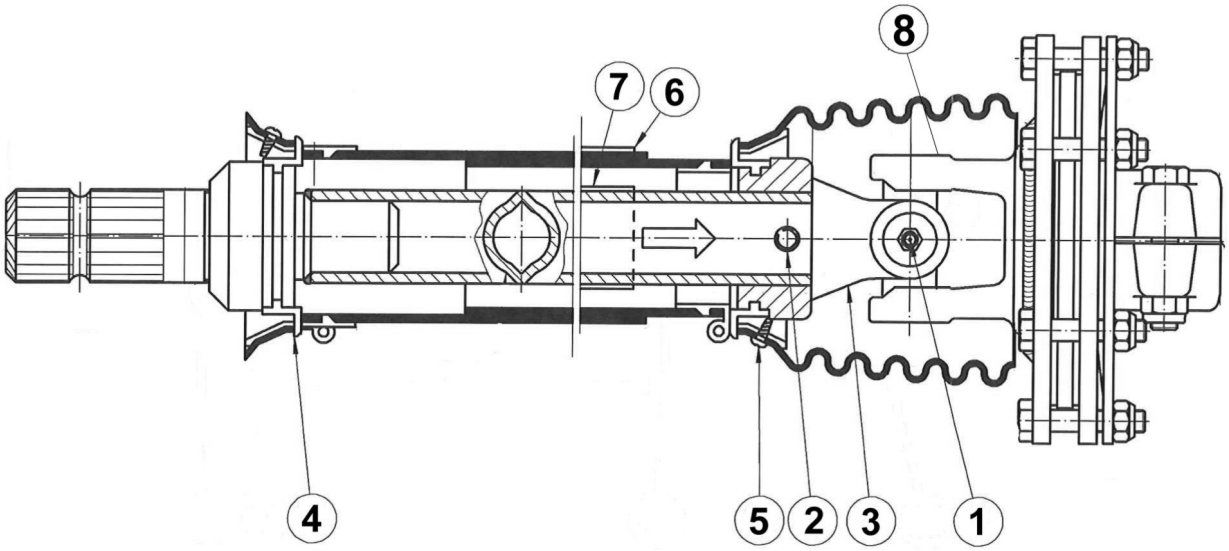

ITEM	PART NO.	QTY.	DESCRIPTION
	00785491	1	JACKSHAFT
1	00779517	1	CROSS & BEARING KIT
2	00756934	1	SPRING PIN 10 X 80
3	8982	1	INBOARD YOKE 1B
4	8393	2	BEARING RING SC25
5	00759217	2	SCREW- IN ITEM 7 & 8
6	00756005	1	DECAL OUT. -IN ITEM 9
7	00756004	1	DECAL INN. -IN ITEM 1
	00774208	1	CC LOCK ASSY - IN ITEM 6
8	00779512	1	CLUTCH

00785503P - RX60 - RX72 - RX84 (01-10)_02-14

GEARBOX ASSEMBLY - RX60, RX72 - SERIAL 11616 - BELOW

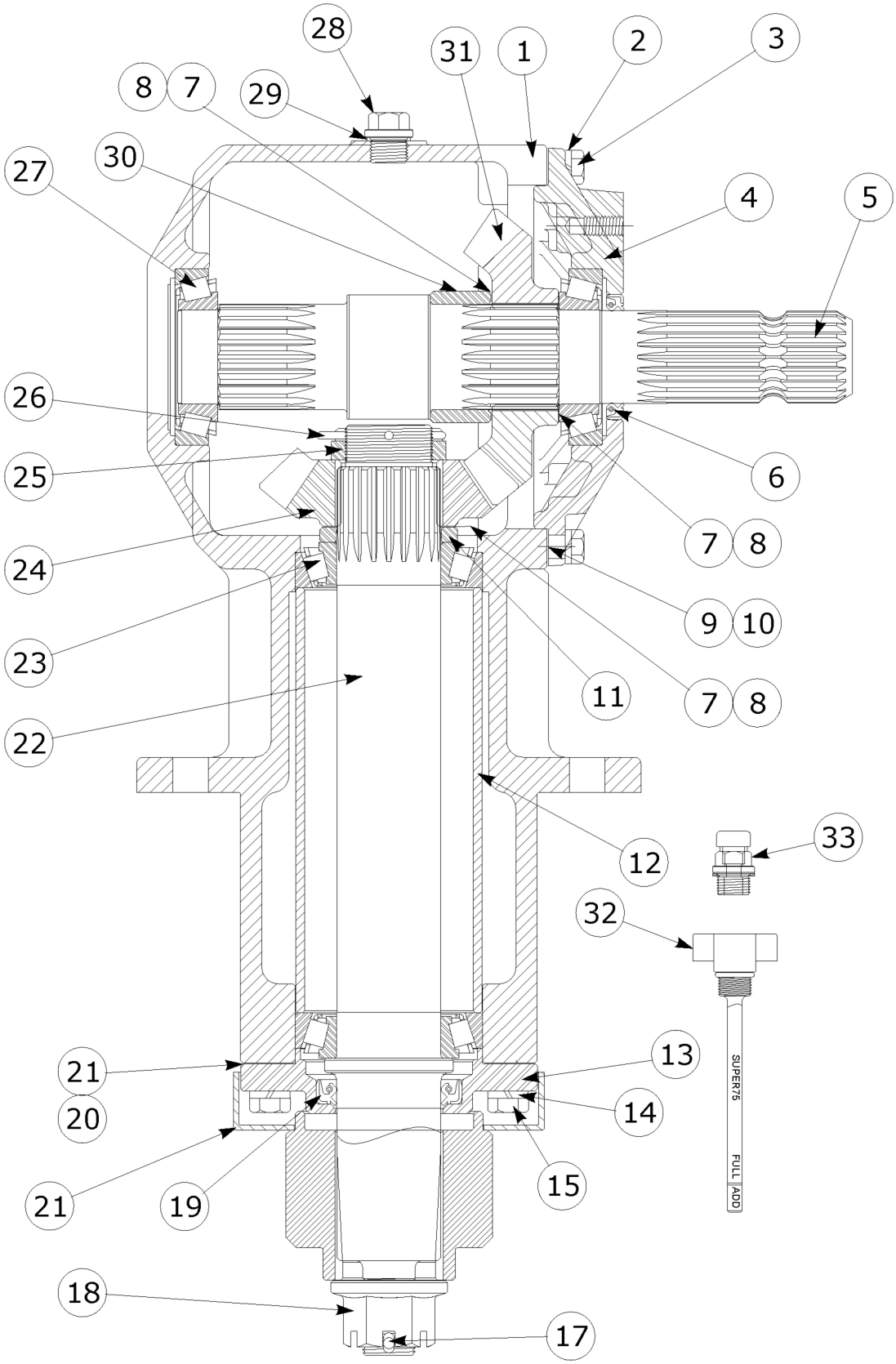

00785503P - RX60 - RX72 - RX84 (01-10)_02-14

Continued...

ITEM	PART NO.	QTY.	DESCRIPTION
	00780880P	1	ASY,GEARBOX, SUPER 75 1:1.6 SU
1	00781380	1	HOUSING 75 SERIES E.O.
2	00755954	8	LOCKWASHER M10
3	00758659	8	HEXB METRIC 10-P1.5 - 32MM PL5
4	00758664	1	CAP,INPUT IEG 20-001
5	00758689	1	SHAFT,INPUT
6	00758653	1	SEAL 1-3/4IDX2.378OD
7	00758667	1	SHIM .012 2.44 O.D.
8	00758668	1	SHIM,0.020 2.44 O.D.
9	00758646	1	SHIM, ADJUSTMENT - .004"
10	00758647	1	SHIM, ADJUSTMENT - .010"
11	00759977	1	SPACER GEAR MOUNT I
12	00781381	1	OUTPUT SPACER
13	00758663	1	CAP,OUTPUT IEG #20-002
14	00758672	4	LOCKWASHER,M12 IEG 07-002
15	02959661	4	HEXB, M12-P1.75 X 35MM PL8.8
17	00606000	1	PIN,COTTER 3/16X2
18	00758692	1	NUT SLOTTED HEX FLG 1-14UNS PL
19	00758674	1	SEAL,OUTPUT SHAFT 50
20	00758676	1	GASKET, .004 OR .1M
21	00758677	1	GASKET, .010 OR .25
22	00781382	1	OUTPUT SHAFT
23	00769938	2	BEARING #30210
24	00758698	1	GEAR,15 TOOTH
25	00762121	1	NUT,HEX THIN SLOTTED
26	00026200	1	PIN,COTTER 5/32 X 1-1/2
27	00755615	2	BEARING
28	00770737	2	LEVEL PLUG M18 X 1.5
29	00769321	3	WASHER,SEALING,17.8M
30	00758657	1	SPACER,INPUT SHAFT
31	00758701	1	GEAR,24 TOOTH
32	00778907	1	ASY,DIP STICK
33	00762114	1	PLUG,VENT W/WASHER 18M-P1.5

©2014 Alamo Group Inc.

GEARBOX ASSEMBLY - RX60, RX72 - SERIAL 11617 - CURRENT

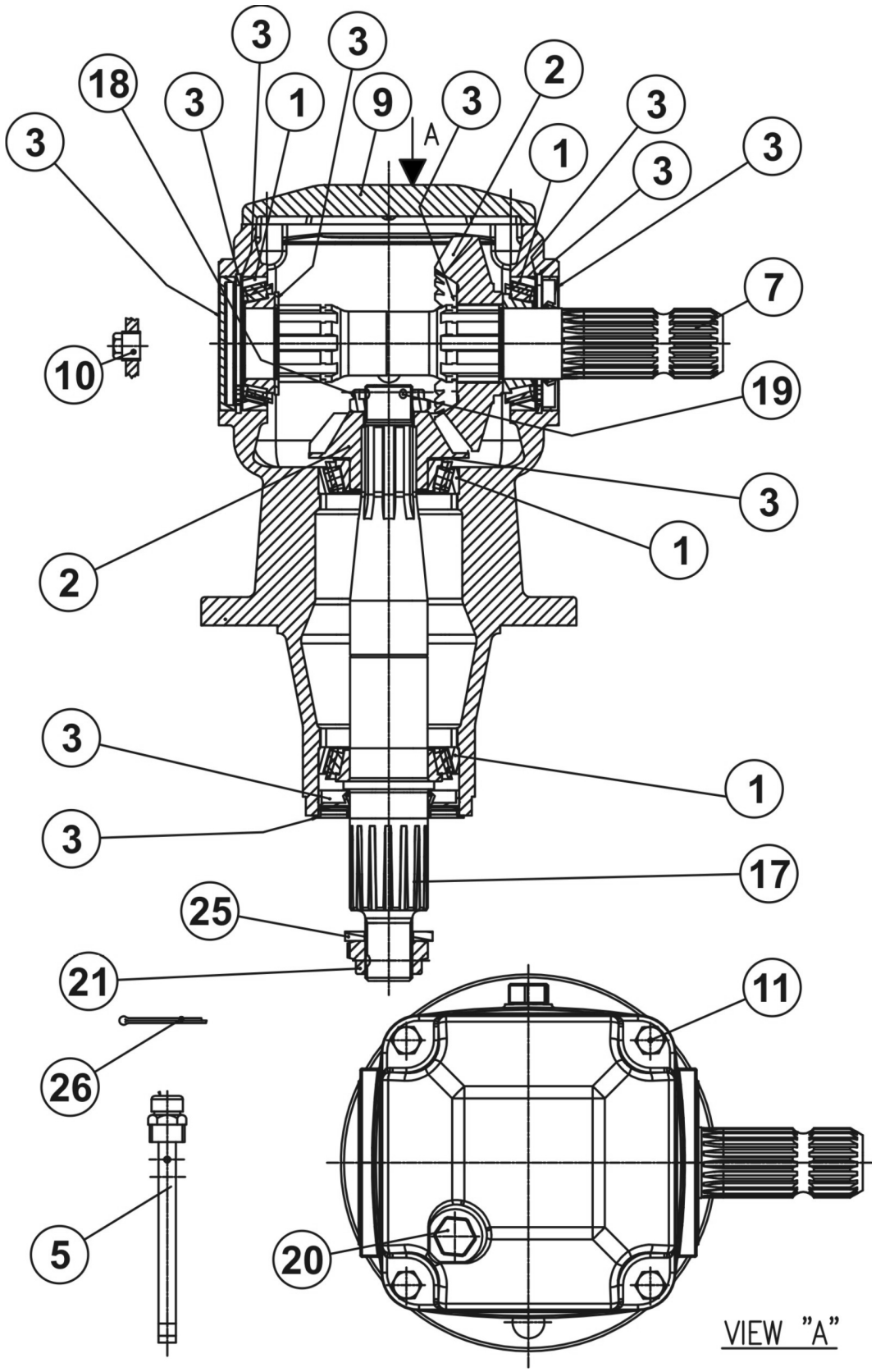

00785503P - RX60 - RX72 - RX84 (01-10)_02-14

Continued...

ITEM	PART NO.	QTY.	DESCRIPTION
	00785788	1	ASY,GEARBOX - NON-LUBED - GEAR IN FRONT 540 RPM,1:1.50 RATIO,1-3/4-20 SPLINE
1	00786292	1	KIT,ROLLER BEARING
2	00786293	1	KIT,GEAR SET
3	00786294	1	KIT,SEAL & SHIM
5	00758484	1	DIPSTICK VENT PLUG 1/2" - FILL
7	00786287	1	SHAFT,INPUT - 1-3/4-20 SPL.
9	00786305	1	COVER,GEAR BOX
10	00755633	1	PLUG,SOLID GAS - 3/8"
11	00754764	4	HEXB M10 X 1.25 X 20 PL.8.8
17	00786288	1	SHAFT,OUTPUT
18	00755621	1	NUT,CASTLE - M30 X 1.5
19	70499	1	PIN,COTTER - B5 X 60
21	00755624	1	NUT,CASTLE - M30 X 2.0
25	00755623	1	WASHER,BOLT - 31 X 56 X 6
26	2716423	1	PIN,COTTER B6 X 60
	00753238	1	SEAL, OIL DBP LIP 45X85X10
	00755627	1	SEAL, OIL 50X90X10

©2014 Alamo Group Inc.

GEARBOX ASSEMBLY - RX84 - SERIAL 10022 - BELOW

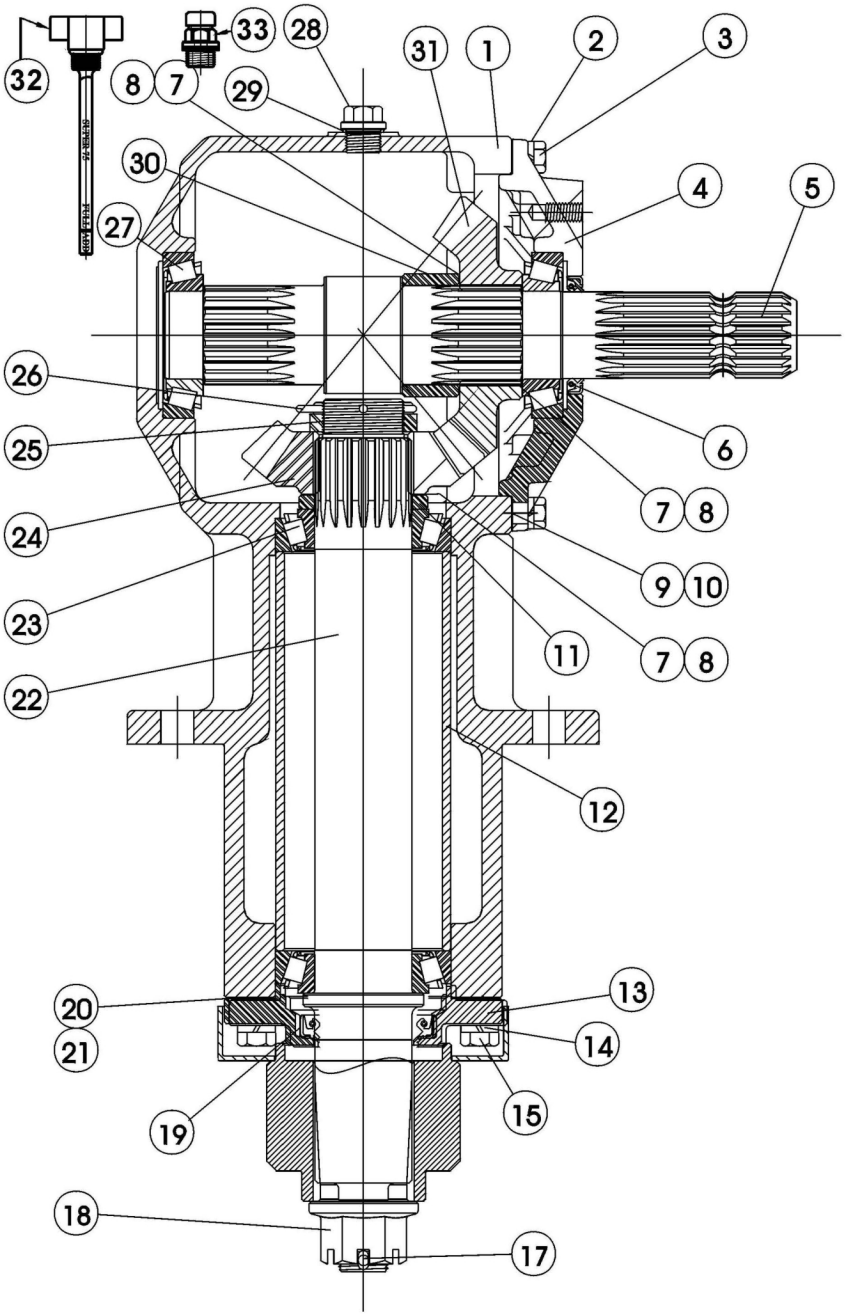

00785503P - RX60 - RX72 - RX84 (01-10)_02-14

Continued...

ITEM	PART NO.	QTY.	DESCRIPTION
	00781080P	1	GEARBOX ASSEMBLY
1	00781380	1	HOUSING 75 SERIES E.O.
2	00755954	1	LOCKWASHER M10 SPRING
3	00758859	8	M10 X 1.5 X 30 HEX HEAD SCREW
4	00758664	1	CAP, INPUT IEG 20-001
5	00758689	1	SHAFT, INPUT
6	00758653	1	SEAL 1-3/4ID X 2.378OD
7	00758667	1	SHIM .012 2.44 O.D.
8	00758668	1	SHIM,0.020 2.44 O.D.
9	00758646	1	SHIM, ADJUSTMENT - .004
10	00758647	1	SHIM, ADJUSTMENT - .010
11	00759977	1	SPACER GEAR MOUNT I
12	00781381	1	OUTPUT SPACER
13	00758663	1	CAP,OUTPUT IEG #20-002
14	00758672	4	LOCKWASHER, M12 IEG 07-002
15	02959661	4	HEXB, M12-P1.75 X 35 MM PL8.8
17	00606000	1	COTTER PIN 3/16" X 2"
18	00758692	1	NUT SLOTTED HEX FLG 1-14 UNS PL
19	00758674	1	OUTPUT OIL SEAL
20	00758676	1	GASKET, .004 OR .1M
21	00758677	1	GASKET, .010 OR .25
22	00781382	1	OUTPUT SHAFT
23	00769938	1	BEARING #30210
24	00781088	1	GEAR, 16 TOOTH PINION
25	00762121	1	NUT, HEX, THIN SLOTTED
26	00026200	1	PIN,COTTER 5/32 X 1-1/2
27	00755615	1	BEARING #30209
28	00770737	1	LEVEL PLUG M 18 X 1.5
29	00769321	1	WASHER, SEALING
30	00758657	1	SPACER, INPUT SHAFT
31	00781089	1	GEAR, 22 TOOTH
32	00778907	1	ASSY-DIPSTICK FOR SUPER 75 GBS
33	00762114	1	PLUG,VENT, 18M-P1.5 5PSI

©2014 Alamo Group Inc.

GEARBOX ASSEMBLY - RX84 - SERIAL 10023 - CURRENT

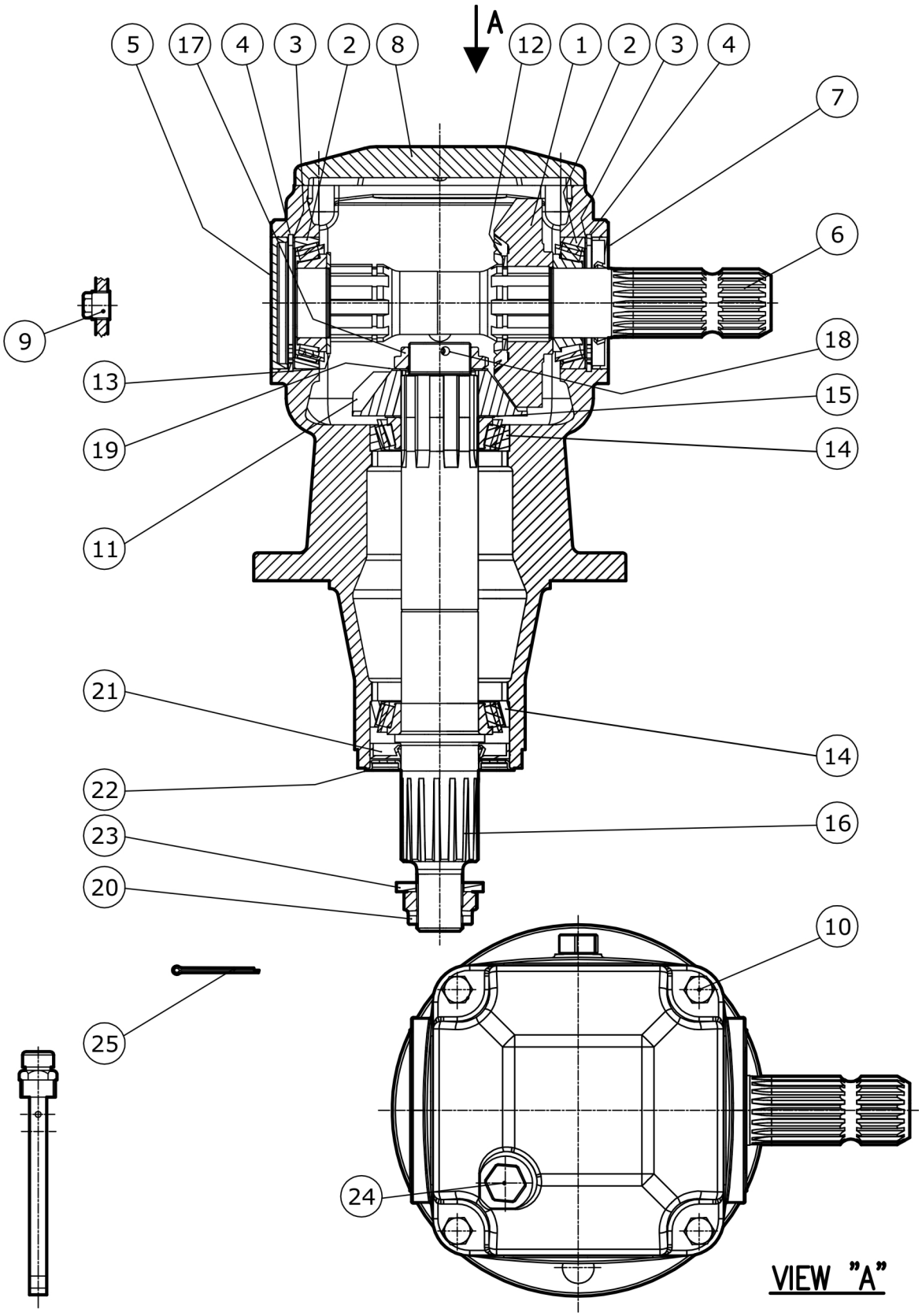

00785503P - RX60 - RX72 - RX84 (01-10)_02-14

Continued...

ITEM	PART NO.	QTY.	DESCRIPTION
	00785790	1	ASY, GEARBOX
1	00786296	1	GEAR,CROWN Z22 M6
2	00755615	2	BEARING,ROLLER - 30209
3	00755619	2	SHIM KIT - 70.3MM X 84.7MM
4	00755618	2	SNAP RING - 85MM X 88.5MM X 3MM
5	00755634	1	CAP,OIL - 85MM X 10MM
6	00786287	1	SHAFT,INPUT - 1-3/4-20 SPL.
7	00786291	1	SEAL,OIL - 45MM X 85MM X 10MM
8	00786305	1	COVER,GEAR BOX
9	00755633	1	PLUG,SOLID GAS - 3/8"
10	00754764	4	HEXB M10 X 1.25 X 20 PL.8.8
11	00786297	1	GEAR,PINION Z18 M6
12	2516460	1	SNAP RING - 50MM X 47MM X 3MM
13	00755632	1	SHIM KIT - 45.3MM X 65.3MM X 2.5MM
14	00769938	2	BEARING,ROLLER - 30210
15	00755622	1	SHIM KIT - 50.3MM X 70.3MM
16	00786295	1	SHAFT,OUTPUT
17	00756943	1	NUT,CASTLE - M40 X 1.5
18	70499	1	PIN,COTTER - B5 X 60
19	00786298	1	SHIM KIT - 40.3MM X 61.7MM X 1.0MM
20	00755624	1	NUT,CASTLE - M30 X 2.0
21	00755627	1	SEAL,OIL - 50MM X 90MM X 10MM
22	00755626	1	WASHER,PROTECTIVE
23	00755623	1	WASHER,BOLT - 31 X 56 X 6
24	00754336	1	1/2" GAS SOLID PLUG
25	2716423	1	PIN,COTTER B6 X 60
26	00786292	1	KIT,ROLLER BEARING
27	00786299	1	KIT,GEAR SET
28	00786294	1	KIT,SHIM
29	00758484	1	DIPSTICK VENT PLUG 1/2" - FILL
	00753238	1	SEAL, OIL DBL LIP 45X85X10
	00755627	1	SEAL, OIL 50X90X10

©2014 Alamo Group Inc.

GEARBOX ATTACHMENT RX60, RX72 SERIAL 11616-BELOW, & RX84

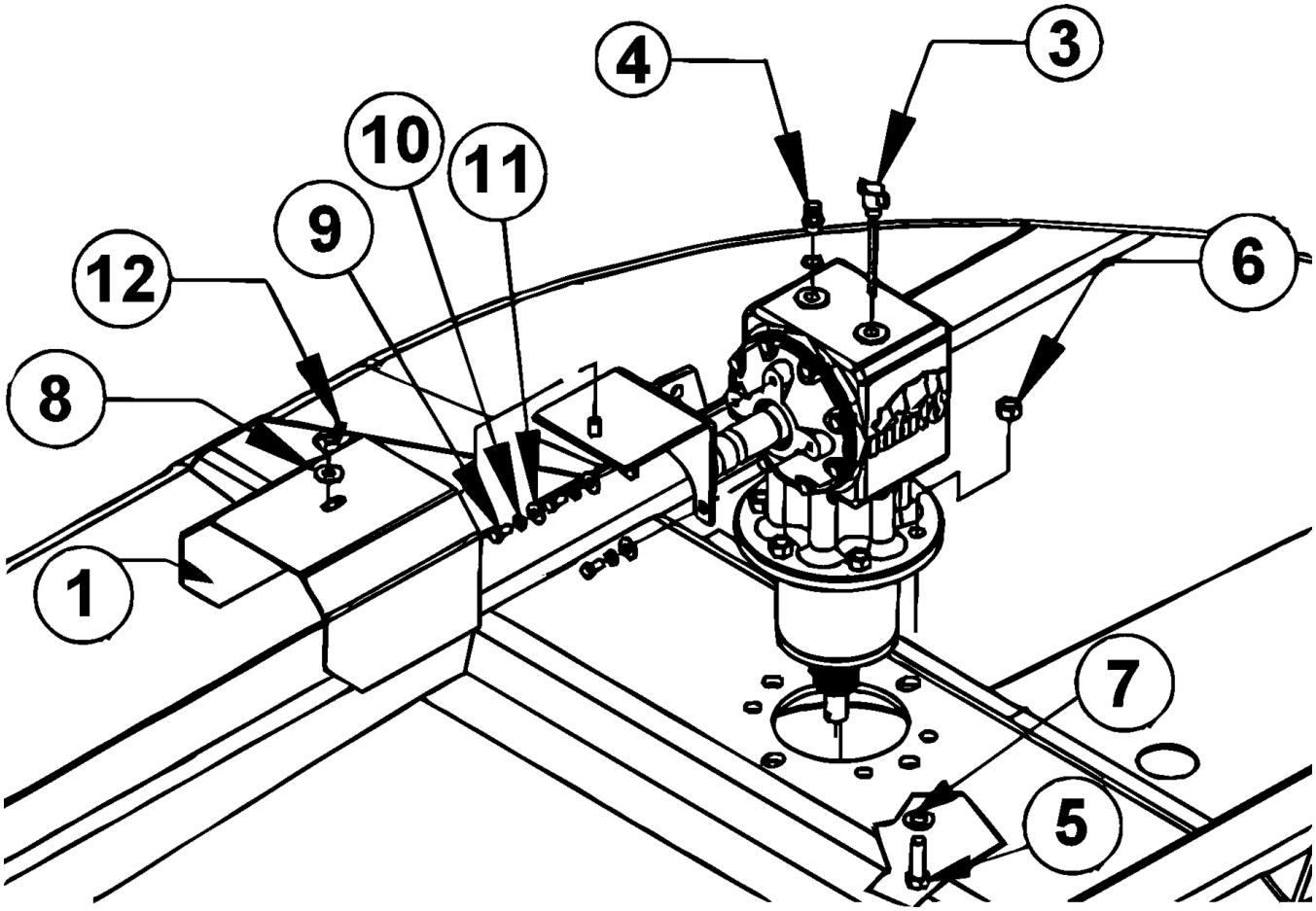

ITEM	PART NO.	QTY.	DESCRIPTION
1	00775571	1	WLDMT SHIELD
2	00775573	1	WLDMT BRKT SHIELD
3	00778907	1	ASSY-DIPSTICK FOR SUPER 75 GBS
4	00762114	1	PLUG,VENT W/WASHER 18M-P1.5
5	02845500	6	HEXB 5/8 NC 2 PL5
6	00695100	6	LOCKNUT TOPLOCK 5/8NC PLC
7	00756077	6	WASHER,5/8 HARDENED
8	00002700	1	FLATWASHER 1/2 PL STD
9	00002000	3	HEX CAP 3/8-16 X 3/4 GR.5 ZP
10	00012101	3	LOCKWASHER 3/8 PL
11	00011100	3	FLATWASHER STD 3/8
12	5F8130	1	1/2 NC WING NUT

00785503P - RX60 - RX72 - RX84 (01-10)_02-14

GEARBOX ATTACHMENT RX72 SERIAL# 11617-CURRENT

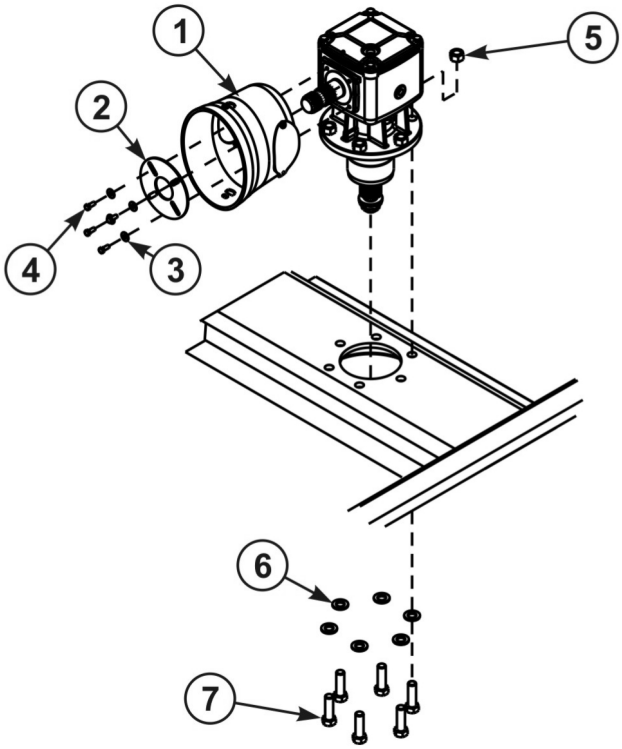

ITEM	PART NO.	QTY.	DESCRIPTION
1	00785575	1	GEARBOX SCHIELD, 4-1/8"-5" BC
2	00785574	1	RING,GB SHIELD INNER SUPPORT
3	00023500	4	FLATWASHER, 5/16" TYPE AW, ZP
4	02958784	4	BOLT METRIC 8-P1.25-20MM PL8.8
5	00037200	6	LOCKNUT, 3/4"-NC TLM PL C
6	5312316	6	WASHER, 3/4" HARDENED
7	00037100	6	HEXB 3/4" NC 2-1/2" PL5

00785503P - RX60 - RX72 - RX84 (01-10)_02-14

©2014 Alamo Group Inc.

HYDRAULIC CYLINDER

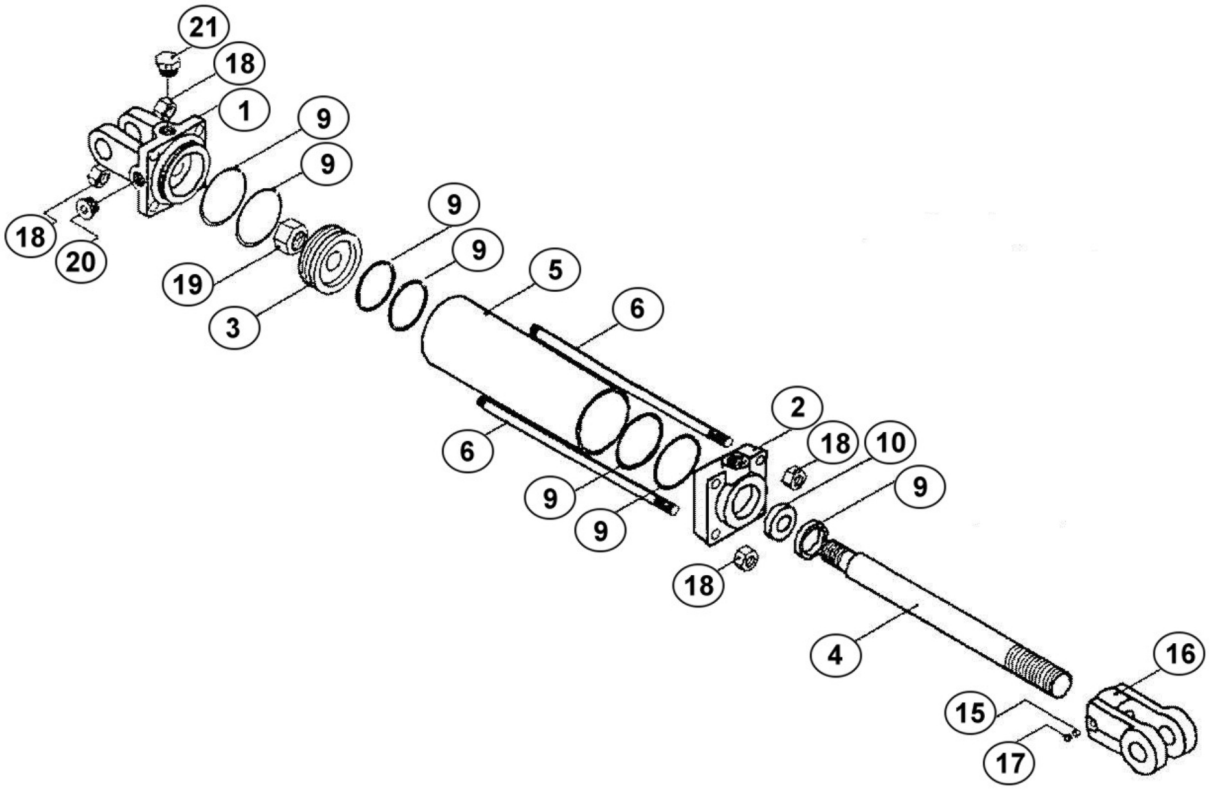

ITEM	PART NO.	QTY.	DESCRIPTION
	8727A	1	HYDRAULIC CYLINDER
1	00774729	1	CLEVIS CAP 2.5-3/4 ORB-1.00
2	00774734	1	ROD CAP 2.50-1.25-3/4 ORB
3	00774730	1	PISTON 2.5-0.75-S HALL W/RING
4	00774753	1	ROD CYL 1.25-08-0.75-1.25-A
5	3047111	1	CYLINDER TUBE
6	3047112	4	TIE ROD
9	00774760	1	SEAL KIT
15	3047117	1	THREAD LOCK
16	1917140	1	ROD CLEVIS
17	00774740	1	SC SCKT SET 3/8UNCX1/2 KNUR
18	33003H5C	8	HEX NUT 3/8-16 GR.5
19	5JRC12160	1	NUT TOPLOCK 3/4 NF PLC
20	1917132	1	SCKT HD O-RNG PLUG,3/4-16 UNF
21	2417154	1	BREATHER,CYLINDER #8 ORB

©2014 Alamo Group Inc.

SKID SHOE ASSEMBLY

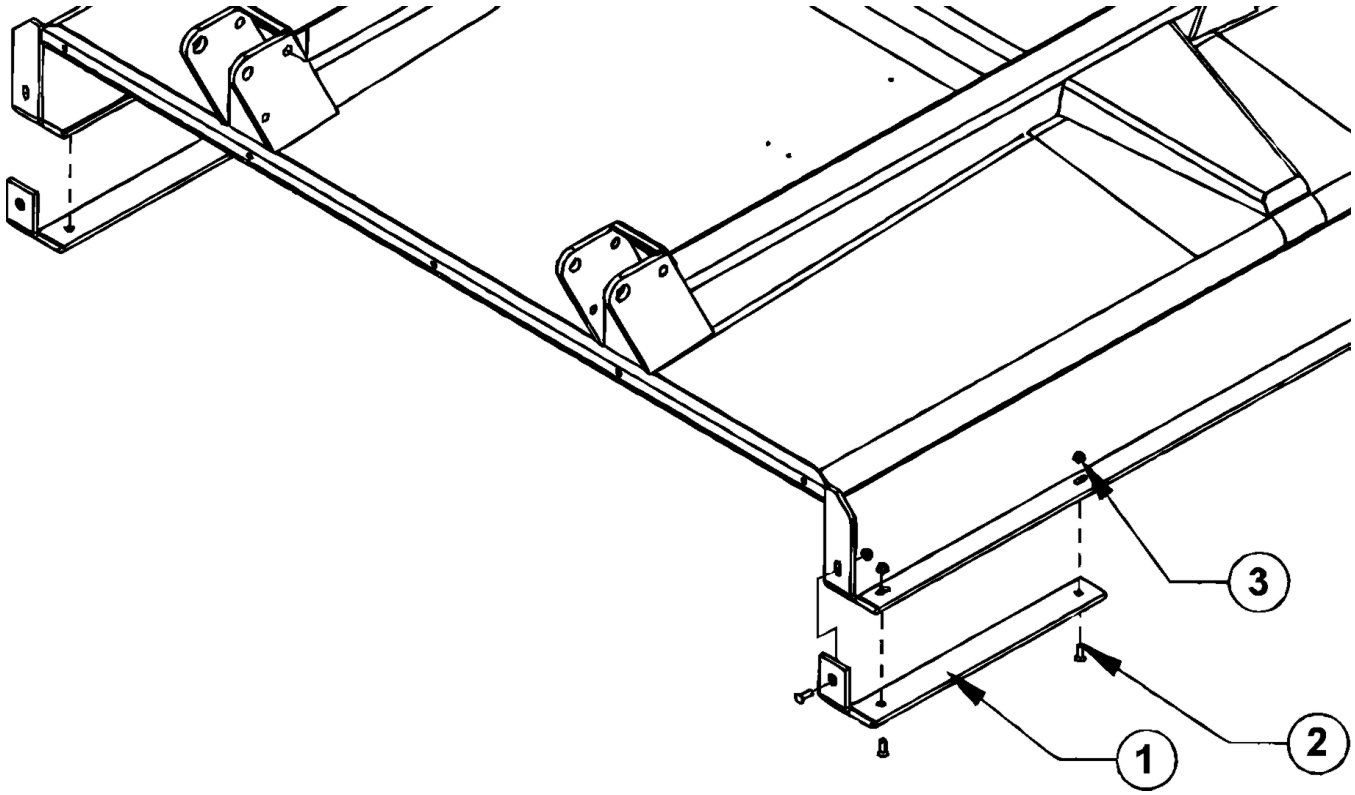

ITEM	PART NO.	QTY.	DESCRIPTION
1	00778905	2	SKID SHOE BAR
2	8277	6	PLOW BOLT 3/8 NC 1-1/4 #3 PL
3	4528	6	NUT, LOCK 3/8-16 FLG WHIZ

©2014 Alamo Group Inc.

SLIP CLUTCH ASSEMBLY - RX60, RX72, RX84

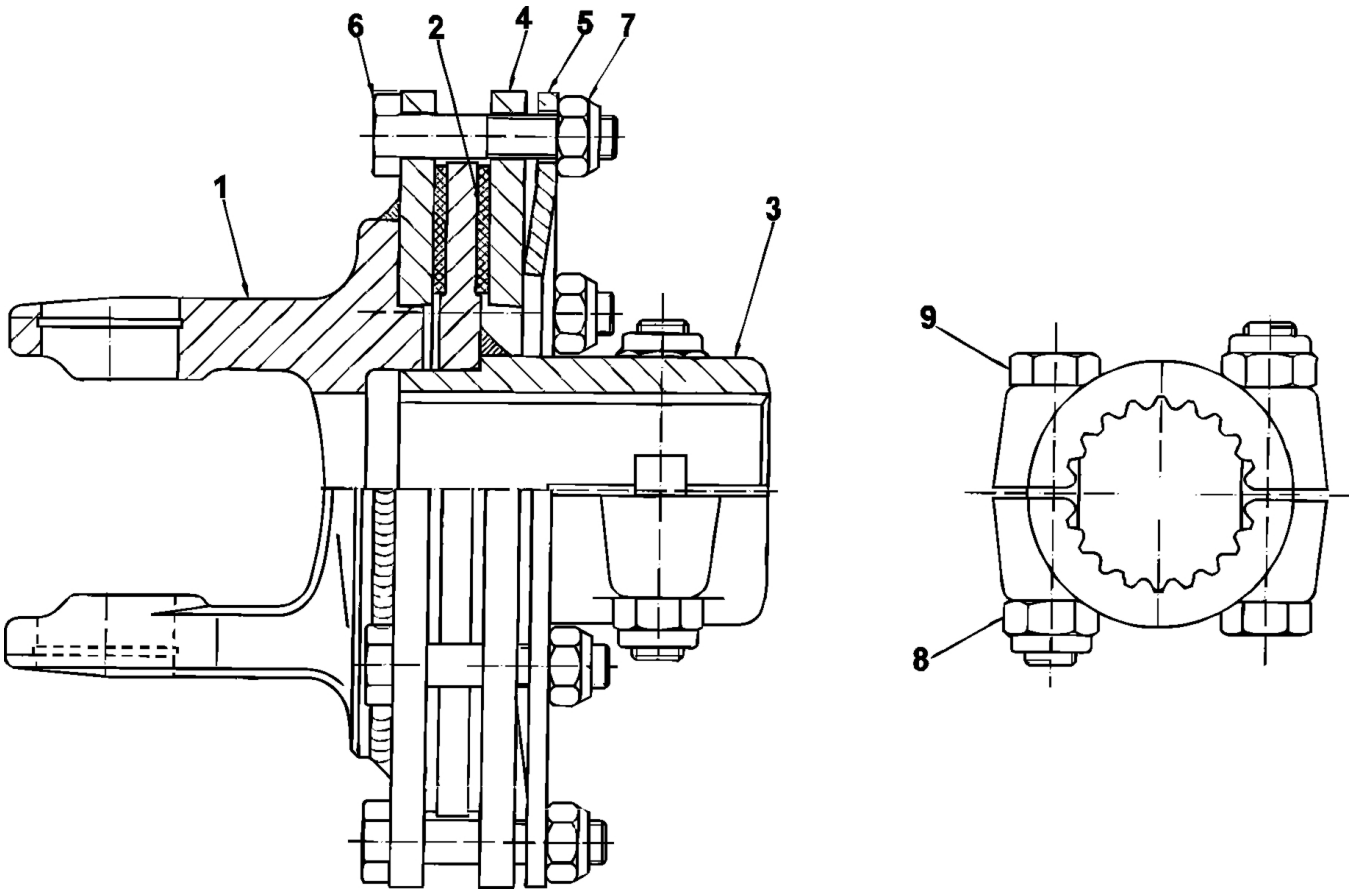

ITEM	PART NO.	QTY.	DESCRIPTION
	00779512	1	SLIP CLUTCH ASSEMBLY
1	00779511	1	FLANGE YOKE
2	00754202	2	RING,CLUTCH LINING
3	00775322	1	HUB 1 3/4-20 I.C.
4	00775323	1	PLATE, THRUST
5	00775324	1	SPRING, BELLEVILLE
6	61064C8	6	M10X1.5X50 GR.8.8 HEX CAPSCREW
7	00765961	6	NUT MET TLE 10MM-P1.5 PL
8	00772648	2	NUT,HEX TOP LOCK-M12 X 1.75
9	61076C8	2	M12X1.75X65 GR.8.8 HEX CAPSCRE

00785503P - RX60 - RX72 - RX84 (01-10)_02-14

SLIP CLUTCH ASSEMBLY CAT-5 - RX84

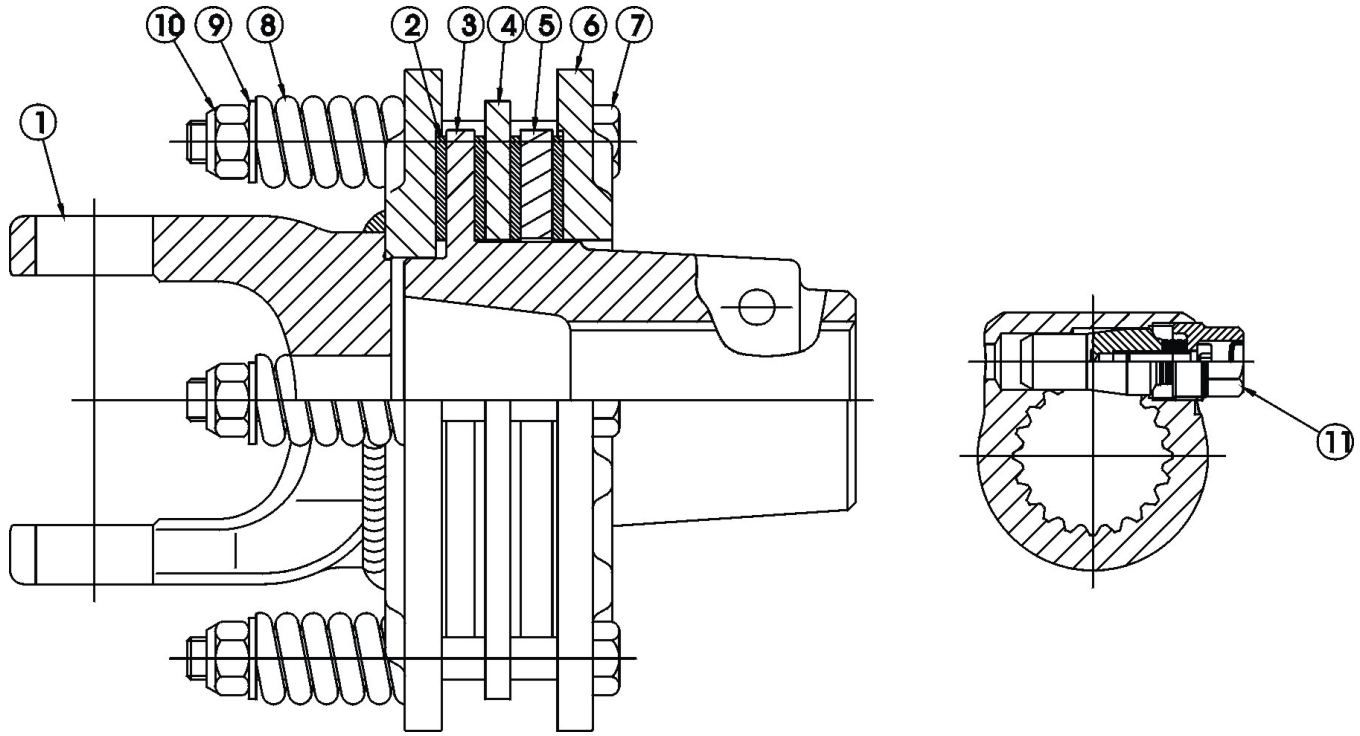

ITEM	PART NO.	QTY.	DESCRIPTION
1	00775383	1	YOKE FLANGE
2	0921000462	4	DISK, CLUTCH 5-15/16X3-19/32X
3	00779366	1	HUB 1-3/4-20
4	00775335	1	DRIVE PLATE
5	00779365	1	DRIVE PLATE
6	00775337	1	THRUST PLATE
7	00775338	6	BOLT HEX M12 X P1.25 X 115M
8	00775339	6	COMPRESSION SPRING
9	00754566	6	LOCKWASHER, 12MM
10	00756164	6	NUT METRIC 12MM-P1.75 GR.8.8
11	00774208	1	LOCK ASY CC YOKE

©2014 Alamo Group Inc.

TAILWHEEL ASSEMBLY - DUAL RX84

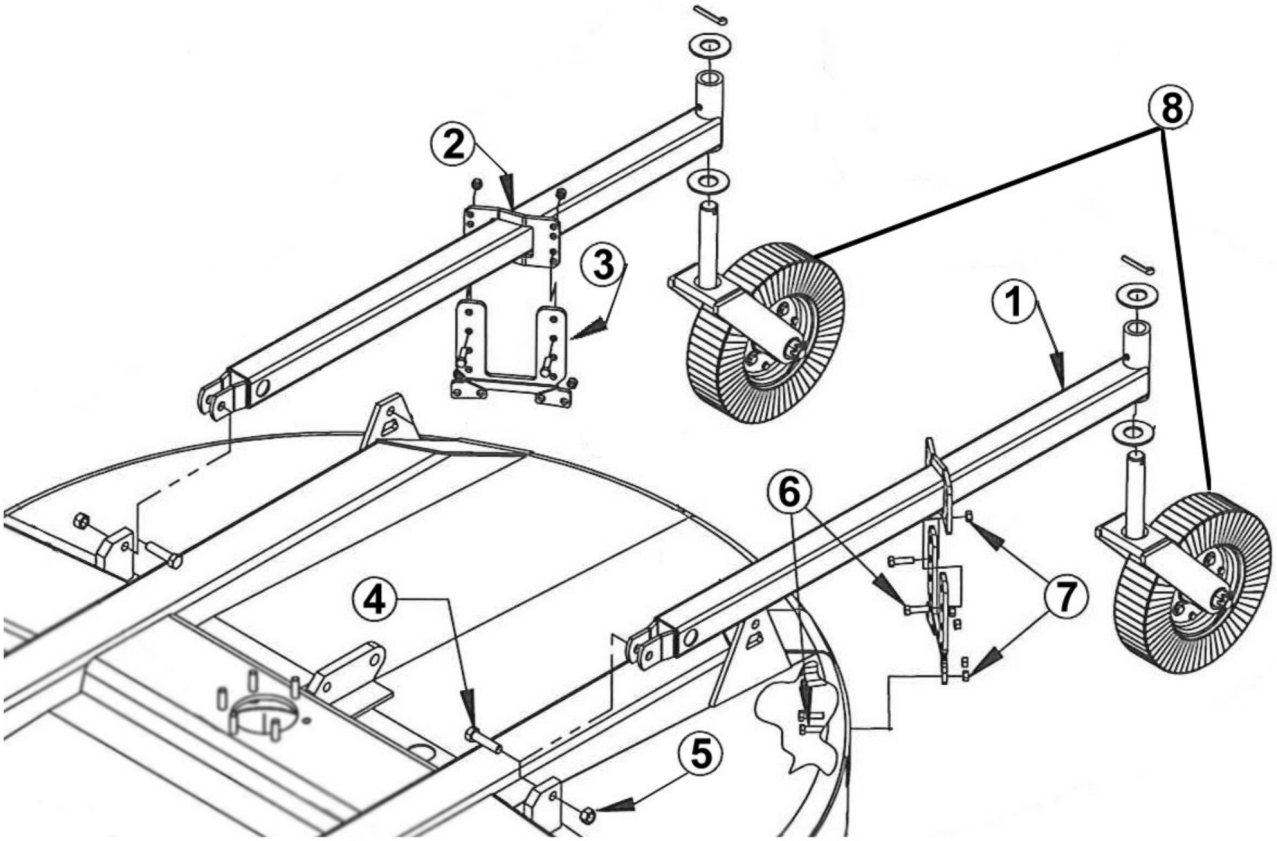

ITEM	PART NO.	QTY.	DESCRIPTION
1	00781077	2	WDMT, T/W BEAM - 284/484
2	00781071	2	FLAT, POSITION BRACKET
3	00785473	2	MOUNT, DUAL TAILWHEEL BEAM
4	00007800	2	HEXB 3/4 NC 3 PL5
5	00037200	2	LOCKNUT 3/4-NC TLM PLC
6	00749130	8	HHCS 1/2-13 UNC 1-3/4 PL5
7	00001800	8	LOCKNUT TLM 1/2 NC PLC
8	00776220	1	WHEEL & FORK ASSEMBLY

00785503P - RX60 - RX72 - RX84 (01-10)_02-14

TAILWHEEL ASSEMBLY - RX60, RX72

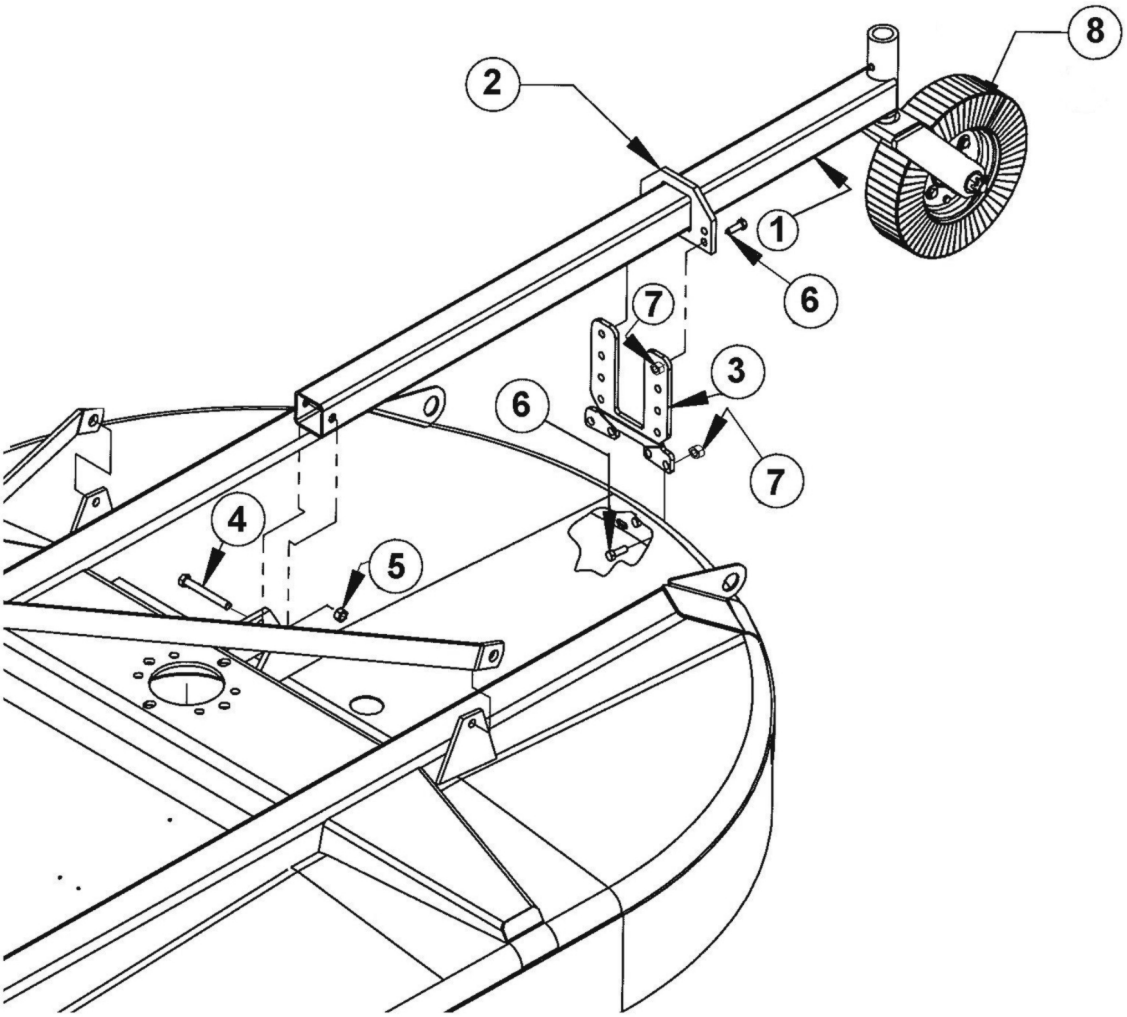

ITEM	PART NO.	QTY.	DESCRIPTION
1	00780876	1	WDMT, T/W BEAM - 272
	00781036	1	WDMT, T/W BEAM - 260
2	0585020300	1	BRACKET, POSITION
3	00785239	1	MOUNT, TAILWHEEL BEAM
4	00059000	1	HEXB 5/8 NC X 5 PL5
5	00695100	1	LOCKNUT TOPLOCK 5/8NC PLC
6	00748823	4	HHCS 1/2-13 UNC 1-1/2 PL5
7	00001800	4	LOCKNUT TLM 1/2 NC PLC
8	00776220	1	ASSY CASTER FORK & WHEEL

00785503P - RX60 - RX72 - RX84 (01-10)_02-14

©2014 Alamo Group Inc.

TAILWHEEL ASSEMBLY - RX84

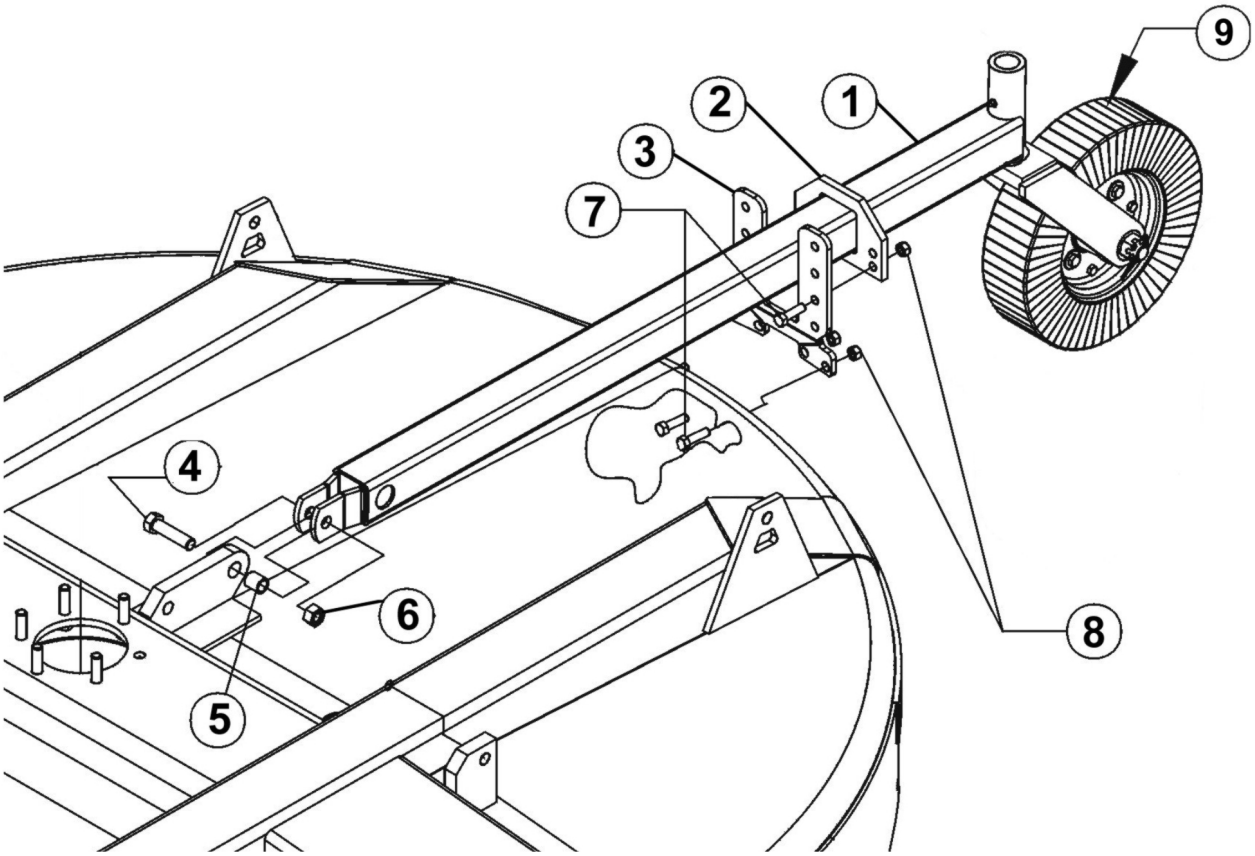

ITEM	PART NO.	QTY.	DESCRIPTION
1	00781077	1	WELDMENT, T/W BEAM
2	0585020300	1	BRACKET POSITION
3	00785473	1	MOUNT, T/W BEAM
4	00007800	1	HEXB 3/4 NC3 PL5
5	00781367	1	TUBE BUSHING
6	00037200	1	LOCKNUT 3/4 NC TLM PLC
7	00749130	4	HHCS 1/2-13UNC 1-3/4 PL5
8	00001800	4	LOCKNUT TLM 1/2 NC PLC
9	15B2400	4	FLATWASHER NAR 1-1/2 PL
10	00758899	1	PIN COTTER 3/8X2-1/2 PL EXTEND
11	00776220	1	ASY,CASTER FORK & WHEEL

©2014 Alamo Group Inc.

TAILWHEEL HUB ASSEMBLY

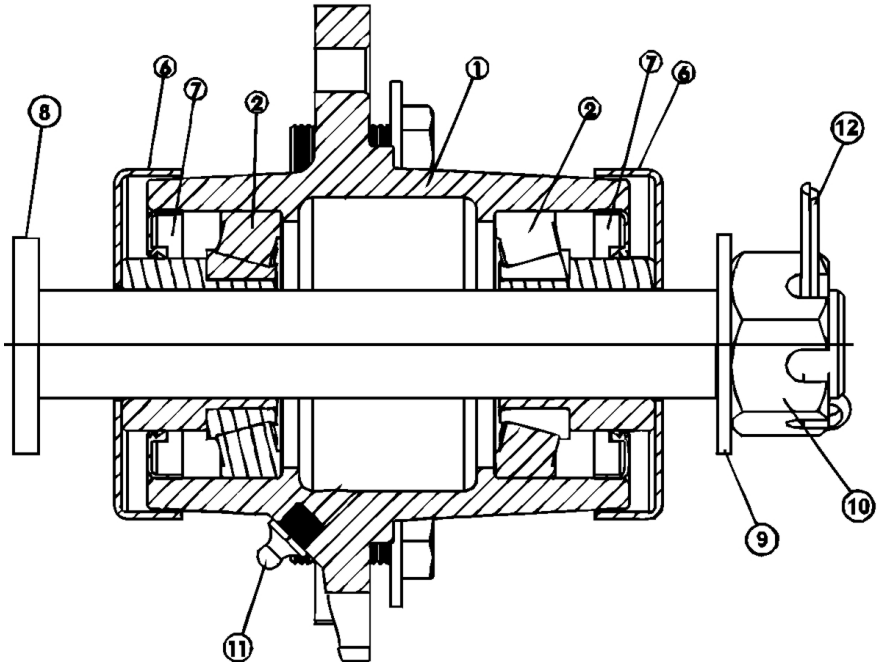

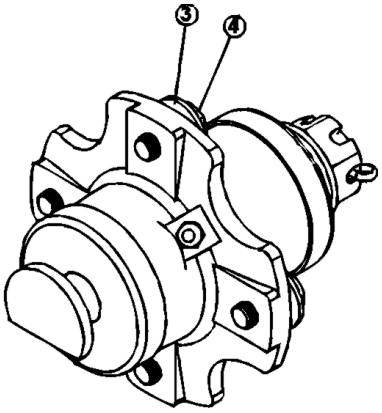

ITEM	PART NO.	QTY.	DESCRIPTION
	00780238	1	ASSY, TAILWHEEL HUB
1	00776214	1	HUB 4 BOLT
2	00776213	2	BEARING
3	00759635	4	FLATWASHER 1/2 HARDND NONPLATD
4	00762462	4	HEXB METRIC 12-P1.75- 25MM PL5
5	00772017	2	BUSHING SPINDLE STEP
6	00772018	2	DUST CAP
7	00776219	2	SEAL OIL 40 X 62 X 8
8	00776211	1	BOLT SPINDLE M24 X 2 X 186
9	00776217	2	WASHER FLAT 026 X 044 X 4 FLAT
10	00776212	1	NUT SPINDLE M24 X 2
11	00772082	1	NIPPLE, GREASE M8X1
12	00771620	1	PIN,COTTER 5/32X2-1/2 PL

00785503P - RX60 - RX72 - RX84 (01-10)_02-14

TONGUE ASSEMBLY - RX84

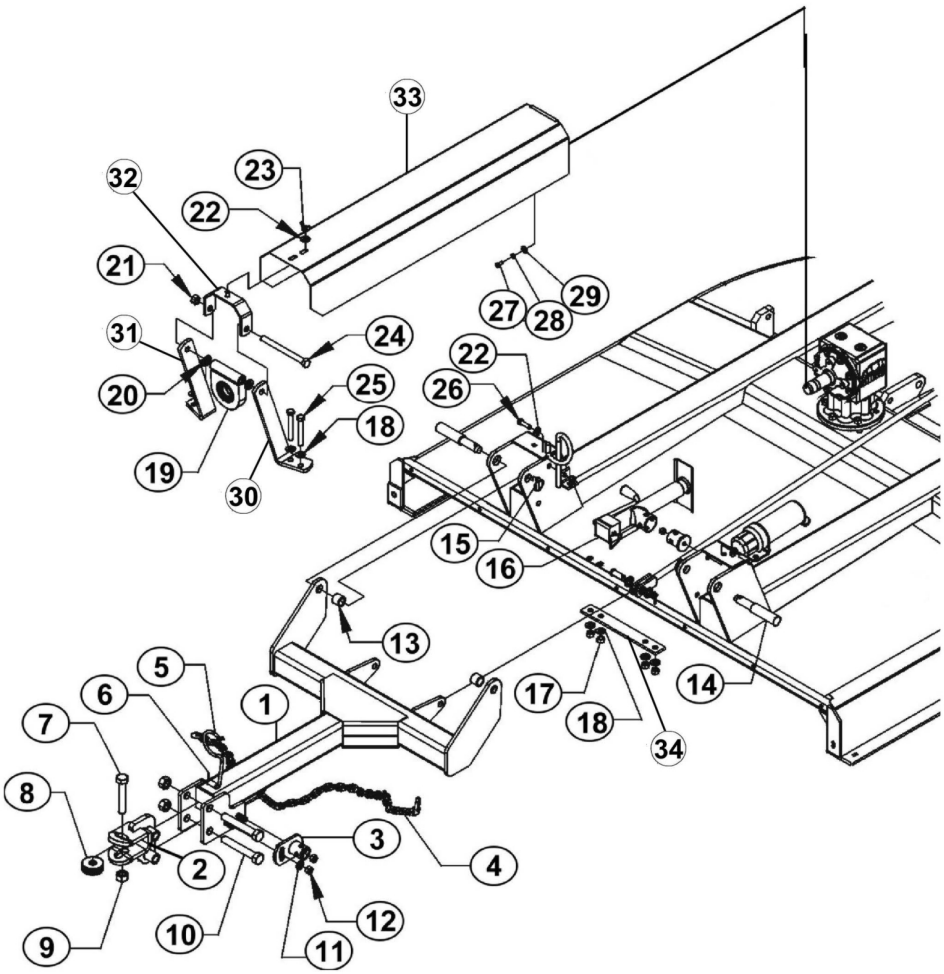

00785503P - RX60 - RX72 - RX84 (01-10)_02-14

Continued...

ITEM	PART NO.	QTY.	DESCRIPTION
1	00777459	1	WDMT, TONGUE
2	00778053	1	WDMT, CLEVIS
3	00760941	1	WDMT, JACK TUBE MOUNT
4	00764515	1	CHAIN, SAFETY TOW-6000# CAP.
5	1431565	1	SHAFT, PTO IID TRANSPORT SUPPRT
6	40010000	1	PIN, COTTER 1/8 X1
7	00755076	1	HHCS 1 NC 5-1/2 PL8
8	00759275	3	WASHER, HITCH CLEVIS
9	02030300	3	NUT TOPLOCK 1 NC PLB
10	00754107	2	BOLT 1 - 8UNC X 6-1/2 PL8
11	00756077	2	WASHER, 5/8 HARDENED
12	00695100	2	LOCKNUT TOPLOCK 5/8 NC PLC
13	00761890	2	BUSHING 1.5 OD X 1.14 IDX 1-3/16 LG
14	00758146	2	PIN, TONGUE PIVOT
15	2196	2	CLIP (LYNCH PIN), 13/32 DIA.
16	00772391	1	PARKING JACK SIDEWIND
17	00695100	4	LOCKNUT TOPLOCK 5/8 NC PLC
18	00001400	8	FLATWASHER 5/8 PL STD
19	00775006A	1	BEARING ASSEMBLY
20	00002701	2	FLATWASHER, 3/4, TYPE AW, ZP
21	00037200	1	LOCKNUT 3/4-NC TLM PLC
22	00002700	1	FLATWASHER 1/2
23	5F8130	1	WINGNUT 1/2 NC
24	00781172	1	HHCS 3/4 NC 8-1/2 PL5
25	02845800	4	HEXB, 5/8 NC X 4-1/2 GRD5 ZP
26	00749130	2	HHCS 1/2 - 13 UNC 1-3/4 PL5
27	00002000	1	HEX CAP 3/8 - 16 X 3/4 GR.5 ZP
28	00012101	1	LOCKWASHER 3/8 PL
29	00011100	1	FLATWASHER 3/8 PL STD
30	00781166	1	FLAT, LH BEARING PIVOT
31	00781167	1	FLAT, RH BEARING PIVOT
32	00781174	1	WELDMENT, SHIELD BRACKET 4 BOLT
	00781168	1	WELDMENT, SHIELD BRACET 3 BOLT
33	00786671	1	WLDMT, J/S SHIELD
34	00781175	1	FLAT, REINFORCING STRAP

©2014 Alamo Group Inc.

TO THE OWNER/OPERATOR/DEALER

To keep your implement running efficiently and safely, read your manuals thoroughly and follow these directions and the Safety Messages in this Manual. The Table of Contents clearly identifies each section where you can easily find the information you need.

The OCCUPATIONAL SAFETY AND HEALTH ACT (1928.51 Subpart C) makes these minimum safety requirements of tractor operators:

REQUIRED OF THE OWNER

1. Provide a Roll-Over-Protective Structure that meets the requirements of this standard.
2. Provide seat belts that meet the requirements of this paragraph of this standard and SAE J4C.
3. Ensure that each employee uses such seat belt while the tractor is moving.
4. Ensure that each employee tightens the seat belt sufficiently to confine the employee to the protected area provided by the ROPS.

REQUIRED OF THE OPERATOR

1. Securely fasten seat belt if the tractor has a ROPS.
2. Where possible, avoid operating the tractor near ditches, embankments, and holes.
3. Reduce speed when turning, crossing slopes, and on rough, slick, or muddy surfaces.
4. Stay off slopes too steep for safe operation.
5. Watch where you are going, especially at row ends, on roads, and around trees.
6. Do not permit others to ride.
7. Operate the tractor smoothly, no jerky turns, starts, or stops.
8. Hitch only to the draw bar and hitch points recommended by the tractor manufacturer.
9. When the tractor is stopped, set brakes securely and use park lock, if available.

☑ **Keep children away from danger all day, every day...**

☑ **Equip tractors with rollover protection (ROPS) and keep all machinery guards in place...**

☑ **Please work, drive, play and live each day with care and concern for your safety and that of your family and fellow citizens.**

ALAMO INDUSTRIAL
Limited Warranty

1. Limited Warranties

1.01. Alamo industrial warrants for one year from the purchase date to the original non-commercial, governmental, or municipal purchaser ("purchaser") and warrants for six months to the original commercial or industrial purchaser ("purchaser") that the goods purchased are free from defects in material or workmanship.

1.02. Manufacturer will replace for the purchaser any part or parts found, upon examination at one of its factories, to be defective under normal use and service due to defects in material or workmanship.

1.03. This limited warranty does not apply to any part of the goods which has been subjected to improper or abnormal use, negligence, alteration, modification, or accident, damaged due to lack of maintenance or use of wrong fuel, oil, or lubricants, or which has served its normal life. This limited warranty does not apply to any part of any internal combustion engine, or expendable items such as blades, shields, guards, or pneumatic tires except as specifically found in your operator's manual.

1.04. Except as provided herein, no employee, agent, dealer, or other person is authorized to give any warranties of any nature on behalf of manufacturer.

2. Remedies And Procedures

2.01. This limited warranty is not effective unless the purchaser returns the registration and warranty form to manufacturer within 30 days of purchase.

2.02. Purchaser claims must be made in writing to the authorized dealer ("dealer") from whom purchaser purchased the goods or an approved authorized dealer ("dealer") within 30 days after purchaser learns of the facts on which the claim is based.

2.03. Purchaser is responsible for returning the goods in question to the dealer.

2.04. If after examining the goods and/or parts in question, manufacturer finds them to be defective under normal use and service due to defects in material or workmanship, manufacturer will:

(A) repair or replace the defective goods or part(s) or

(B) reimburse purchaser for the cost of the part(s) and reasonable labor charges (as determined by manufacturer) if purchaser paid for the repair and/or replacement prior to the final determination of applicability of the warranty by manufacturer. The choice of remedy shall belong to manufacturer.

2.05. Purchaser is responsible for any labor charges exceeding a reasonable amount as determined by manufacturer and for returning the goods to the dealer, whether or not the claim is approved. Purchaser is responsible for the transportation cost for the goods or part(s) from the dealer to the designated factory.

3. Limitation Of Liability

3.01. Manufacturer disclaims any express (except as set forth herein) and implied warranties with respect to the goods including, but not limited to, merchantability and fitness for a particular purpose.

3.02. Manufacturer makes no warranty as to the design, capability, capacity, or suitability for use of the goods.

3.03. Except as provided herein, manufacturer shall have no liability or responsibility to purchaser or any other person or entity with respect to any liability, loss, or damage caused or alleged to be caused directly or indirectly by the goods including, but not limited to, any indirect, special, consequential, or incidental damages resulting from the use or operation of the goods or any breach of this warranty. Not withstanding the above limitations and warranties, manufacturer's liability hereunder for damages incurred by purchaser or others shall not exceed the price of the goods.

3.04. No action arising out of any claimed breach of this warranty or transactions under this warranty may be brought more than two (2) years after the cause of action has occurred.

4. Miscellaneous

4.01. Proper venue for any lawsuits arising from or related to this limited warranty shall be only in Guadalupe county, Texas.

4.02. Manufacturer may waive compliance with any of the terms of this limited warranty, but no waiver of any terms shall be deemed to be a waiver of any other term.

4.03. If any provision of this limited warranty shall violate any applicable law and is held to be unenforceable, then the invalidity of such provision shall not invalidate any other provisions herein.

4.04. Applicable law may provide rights and benefits to purchaser in addition to those provided herein.

Keep for your records

Attention: Purchaser should fill in the blanks below for his reference when buying repair parts and/or for proper machine identification when applying for warranty.

Alamo Industrial Implement Model _____ Serial Number _____
Date Purchased _____ Dealer _____

Attention:
Read your operator's manual

ALAMO INDUSTRIAL
1502 E. Walnut
Seguin, Texas 78155
830-379-1480

ALAMO® INDUSTRIAL

BUILT SHARPER®

An Alamo Group Company

1502 E. Walnut St.
Seguin, Texas 78155

Sales and Marketing

Tel 800.882.5762 Fax 830.379.0864
support@alamo-industrial.com

Warranty Registration/Claims

www.alamoparts.com

Return Authorizations

Online Part Orders
Techical Information
www.alamoparts.com
Tel 800.356.6286 Fax 800.322.5141
www.alamo-industrial.com

GENUINE ALAMO® INDUSTRIAL OEM PARTS