
ALAMO
INDUSTRIAL
A Member of the ALAMO GROUP
PRODUCT GUIDE

ALAMO GROUP

MUNICIPAL MOWING SOLUTIONS

As a proud member of Alamo Group, Municipal Mowing Solutions is committed to driving the evolution of global equipment solutions. We value the safety and prosperity of communities around the world and hold ourselves accountable for preserving the health of our planet. We respond proactively to the ever-changing nature of our world, developing groundbreaking equipment that meets the changing needs of every community. At Alamo Group, we believe in a better future – because we're building it.

At Alamo Group Municipal Mowing Solutions, we bring together four industry-leading brands—Alamo Industrial, Terrain King, Mantis, and Tiger —to deliver powerful, purpose-built vegetation management solutions trusted by municipalities, contractors, and public works professionals.

Alamo Industrial has been a leader in right-of-way clearing, roadside mowing, and grounds maintenance equipment for over 50 years, offering durable boom, flail, and rotary mowers designed for long life and reliable performance.

Tiger builds rugged rotary and flail boom mowers, side and rear mowers, and specialty mowing systems that tackle the toughest roadside vegetation challenges with quality and dependability.

Terrain King partners with Kubota engineering to craft high-performance tractor-mounted mowers and brush cutters that deliver precision and efficiency in roadside and right-of-way maintenance.

Mantis delivers next-generation prime mover solutions with exceptional maneuverability and attachment flexibility—built in the USA to power through demanding mowing, cutting, and clearing tasks.

Together, AGMMS equips crews with rugged, innovative machinery that keeps public spaces safe, scenic, and well-maintained—every season, every job.



Machete® 3

Piston pump boom with a king post mount giving it a 120° front to back hydraulic swing.

Boom Reach Options
18', 22' and 25'
*with 60" Rotary Head

Tractor Minimums
8,500lbs & 90 engine HP
90" wheelbase
18" ground clearance
CAB

Other Available Attachments
SD Rotary Head
Ditcher | SRD50 Mulcher
Flail Axe® | Buzz Bar®
HD Grass Flail | Timber Cat



Maverick 2

Piston pump boom with a turret-style mount giving it a 180° front to back hydraulic swing.

Boom Reach Options
24', 28' and 30'
*with 60" Rotary Head

Tractor Minimums
10,500lbs & 90PTO HP
90" wheelbase
18" ground clearance
CAB

Other Available Attachments
SD Rotary Head
Ditcher | SRD50 Mulcher
Flail Axe® | Buzz Bar®
HD Grass Flail | Timber Cat



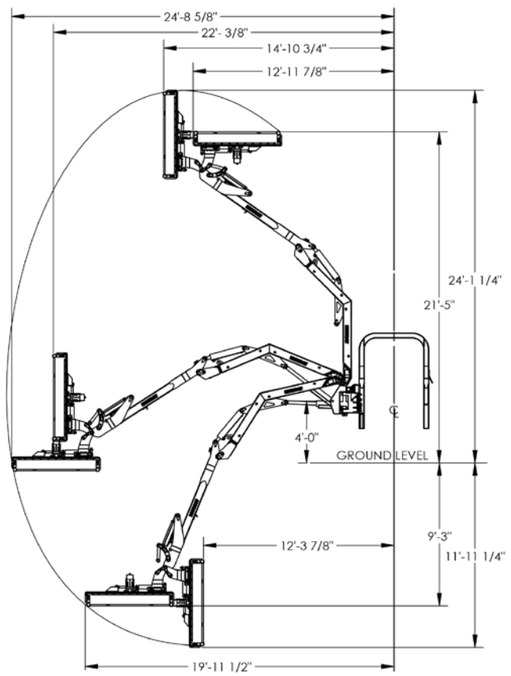

Boom Reach based on 25' Boom with 60" Rotary

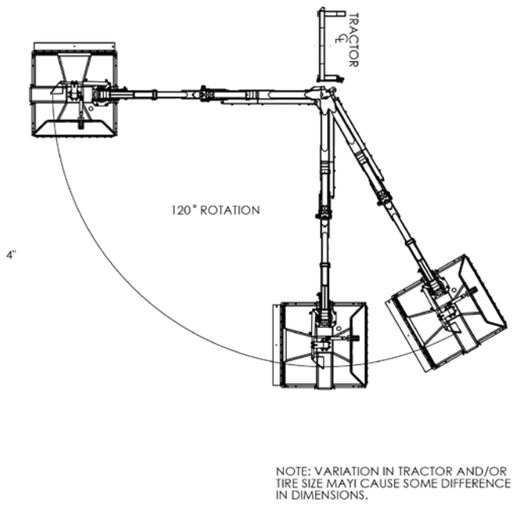

NOTE: VARIATION IN TRACTOR AND/OR TIRE SIZE MAYI CAUSE SOME DIFFERENCE IN DIMENSIONS.

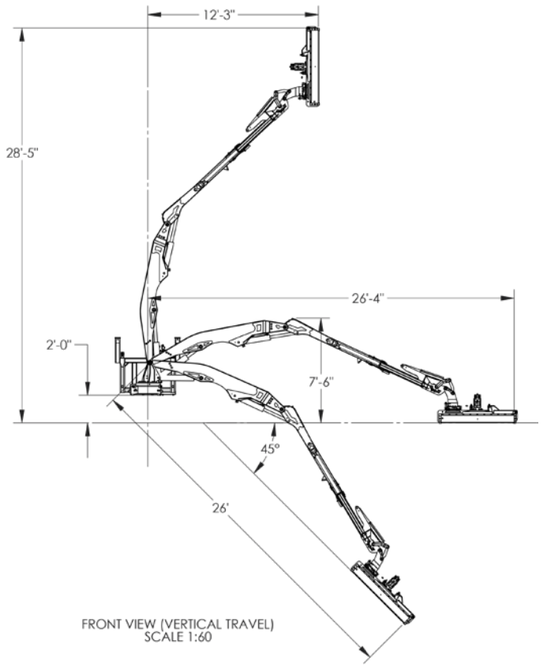

FRONT VIEW (VERTICAL TRAVEL)
SCALE 1:60

Boom Reach based on 30' Boom with 60" Rotary

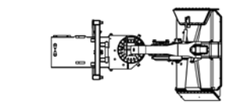

TOP VIEW (FOLDED UP)
SCALE 1:60

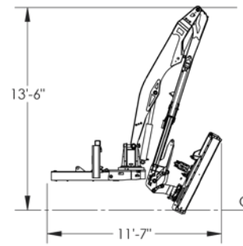

SIDE VIEW (FOLDED UP)
SCALE 1:60

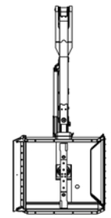

FRONT VIEW (FOLDED UP)
SCALE 1:60

Samurai®

Gear pump boom with a king post mount that reaches over guardrails with ease.

Boom Reach Options
18’, 22’ and 25’
*with 60” Rotary Head

Tractor Minimums
8,500lbs & 90 engine HP
90” wheelbase
18” ground clearance
CAB

Other Available Attachments
SD Rotary Head
Ditcher | SRD50 Mulcher
Flail Axe® | SHD & HD Grass Flail
Buzz Bar® | Timber Cat



Boom Reach based on 22’ Boom with 60” Rotary

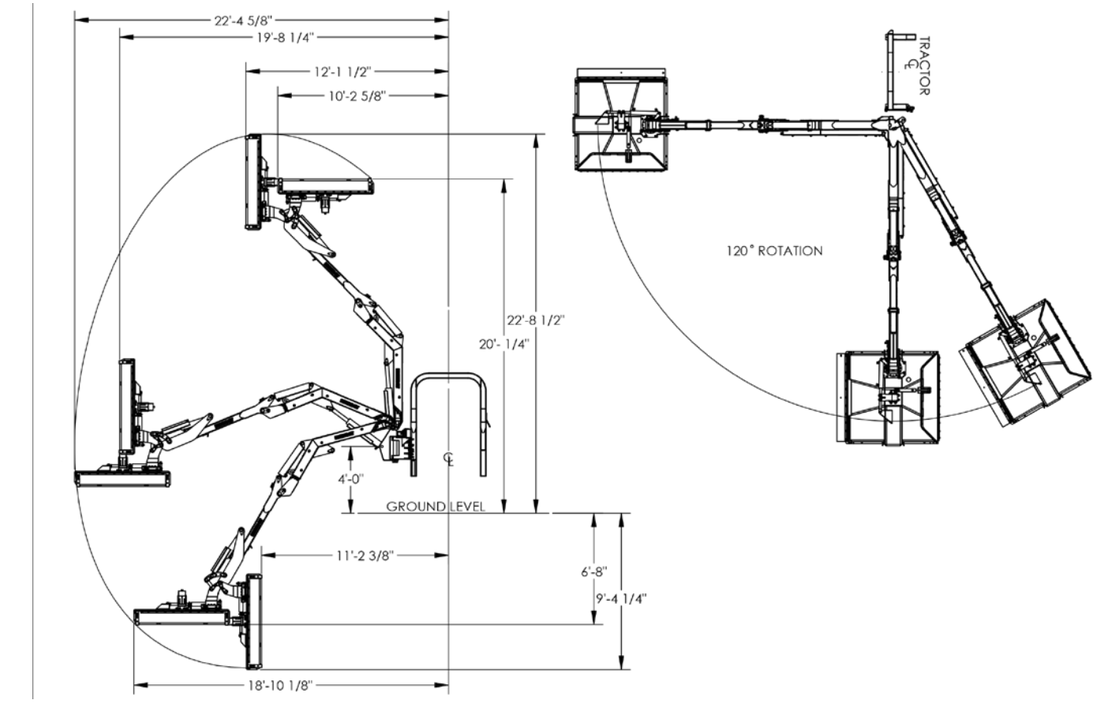

VARIATION IN TRACTOR OR TIRE SIZE MAY CAUSE SOME DIFFERENCE IN DIMENSIONS

Roadmaster 1902S

Strong Drive-Train

Hydraulic Side-Shift

Impact Protection

Cutting Width
72”
Weight
1,764 lbs
Min PTO Power
60 HP
PTO Drive Shaft
540 RPM



Interstater

The Interstater combines a side mount flail with the super heavy duty rear mounted flail to create a Flail system that allows you to mow from 6’ to 20’ in just one pass.

Customize the Interstater to fit your needs with any of these configurations:

62”, 74”, or 88” right wing with an optional 96” or 88” SHD Rear Mount Flail

Dual wing configuration available in 62”, 74”, or 88” wings with 112” SHD Rear Mount Flail







Severe Duty Rotary

The Severe Duty Rotary can cut grass and brush up to 5in in diameter and comes with full-swinging, double-edged, tempered steel blades.
Machete® 3, Maverick 2, Samurai®





Flail Axe

The Flail Axe can cut grass or brush up to 4in in diameter and is equipped with 16 anvil style blades.
Machete® 3, Maverick 2, Samurai®

BuzzBar

The BuzzBar is equipped with 26in circular blades that allow you to cut as clean as a chainsaw. The BuzzBar can cut vegetation up to 4in in diameter and comes in 2, 3, and 4 blade widths.
Machete® 3, Maverick 2, Samurai®



Ditcher

The Ditcher is made to remove excess dirt or unwanted vegetation from ditches 22in wide and 11in deep.
Machete® 3, Maverick 2, Samurai®



Timber Cat

The Timber Cat cuts like a hedge trimmer and can tackle limbs up to 4in in diameter. The heavy duty cutter bar is made of two 5/8in thick blades constructed from high strength alloy steel.
Machete® 3, Maverick 2, Samurai®



Heavy Duty Grass Flail

The Heavy Duty Grass Flail is equipped with 40 pairs of replaceable blades and can cut vegetation up to 2in in diameter.
Machete® 3, Maverick 2, Samurai®





SRD50

The SRD50 is designed to cut growth and then grind material into mulch. The SRD50 can cut up to 50in wide and 8in in diameter and features 18 individual cubit knife cutting tools.
Machete® 3, Maverick 2, Samurai®

Quick Hitch

Alamo Industrial® exclusive quick attach system. It allows you to change cutting heads in the shop or field in approximately ten minutes.
Machete® 3, Maverick 2, Samurai®



Versa Rotary

Versa® controls have “float” positions that allow the rotary head to follow terrain contours without operator control.

Cutting Swath
60” or 72”

Cutting Capacity
2”

30° break-away option for 60” rotary
Front & Rear Double Chain Guards
Full-length Replaceable Skid Shoes
Available with a Blade-Bar or a Blade-Pan





Falcon

With the Falcon, you have the flexibility to engage the side of the mower you need without the danger of exposed spinning blades to your operators or bystanders.

Cutting Capacity
3.5”
Cutting Width
10’ & 15’

Mounting
Min 50 PTO HP and features a self-level lift draw-bar hitch design for uniform cutting.

Tractor Minimums
75 HP
Transportation Width
96 in

Versa Flail

Versa Flail easily cuts through thick grass and weeds, it will also leave a smooth, finished cut. The mower has a float control that allows it to follow the contour of the ground.

Cutting Capacity
1” Diameter
Cutting Width
74” & 88”
Tractor Minimums
60 engine HP





Super Heavy Duty

The Super Heavy Duty is known for durability and unmatched performance offering a manicured look with substantial safety.

Cutting Width - 74” | 88” | 96”

Knife Pairs - Coarse Cut - 36 | 44 | 48

Knife Pairs - Fine Cut - 92 | 108 | 118

Approx. Weight (lbs) - 930 | 1035 | 1170

Tractor PTO HP - 35 | 40 | 50

Truckat

The TrucKat Boom Mower is crafted from premium materials and designed with ultimate freedom in mind. This means you can travel to and from job sites at standard road speeds, and once there, leverage the latest advancements in boom mowing technology to handle even the toughest tasks effortlessly. Now available with 18’ and 22’ booms, offering greater reach and power.



Wildkat

The WildKat (Side Shift w/ ARCH) mower operates like a side mower with a swing system like a boom mower. The WildKat mower gives the operator the ability to shift the cutter head horizontally up to 29½ inches with the hydraulic control system.
The WildKat’s ARCH BOOM design with the combined side shift features gives the mower a maximum reach out of 16 feet and a reach up of 12.8 feet.

Other Available Attachments
60” Rotary Head | 75” Grass Flail



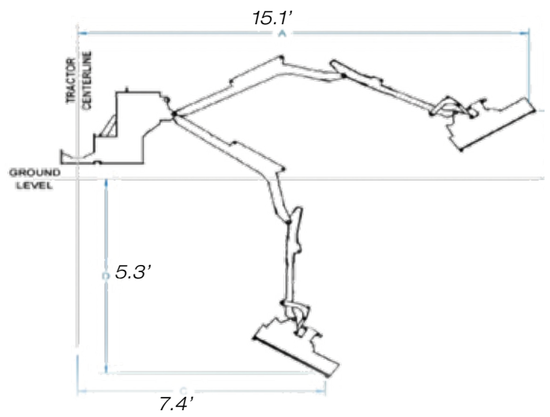

Boom Reach based on 60’ Rotary

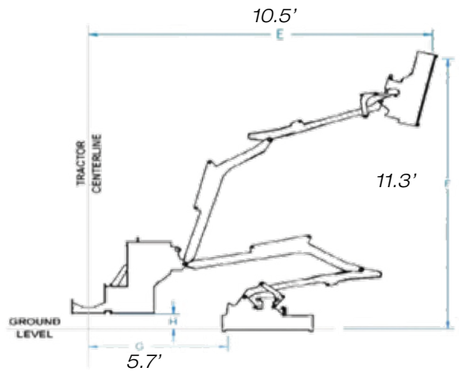

variation in tractor or tire size may cause some difference in dimensions

RM Series

Rear mount boom built for reliability and efficiency.

Boom Reach Options
16’4” and 18’1”
*with 60” Rotary Head

Tractor Minimums
58 PTO HP
540 rpm PTO output shaft
CAB

Other Available Attachments
48” Medium Duty Flail
48” Heavy Duty Flail
48” Medium Duty Rotary
60” Heavy Duty Rotary
69” Buzz Bar®



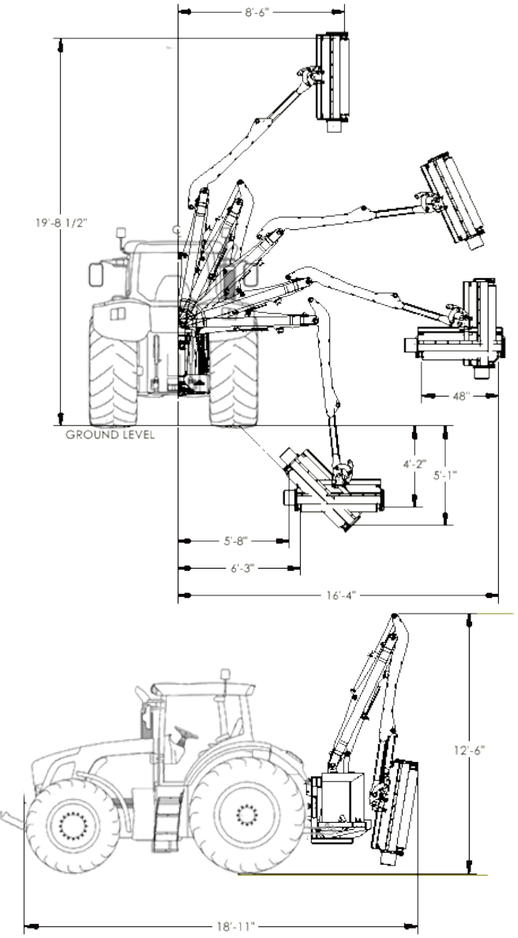

Boom Reach based on RM165 with Flail Mower

Switch Blade

Cutting Capacity
.5”
Cutting Width
5’ & 6’

Tilt Angle
The tilt angle of 90° up and 75° down.

Tractor Minimums
3,000 lbs
Safety
The unit features an automatic, self returning breakaway system that allows the cutter bar to hinge when obstructed



2100

Mounting Frame & Turning Arm
Bolted frame design structurally ties front bolster to rear axle plates. Mid-mounted with lower center of gravity.
Control Features
Master safety switch permits six second blade shut-down. Standard proportional joystick controls.
Hydraulic Reservoir
Large capacity under fender hydraulic tank with a return filter placement that allows easy access.

Boom Reach
21’ *with 60” Rotary Head
Below Grade Reach
13’6”
Horizontal Reach
21’7”
Vertical Reach
18’1”
Other Available Attachments
48” Heavy Duty Flail
50” and 60” Heavy Duty Rotary Saw Blade



TRAXX RC75

General Specs
- Variable travel speeds 0-4.3mph
- Overall Width - 51”
- Overall Length - 90”

*without attachment
- Overall Height - 41” / 31”
- Total Weight - 2,650lbs / 2,870lbs

*without attachment
- 1,200lb attachment lift capacity
- Cutting height range between .79in - 3.35in

Engine
- 75 HP
- 10 gallon fuel tank capacity
- 5.3 gallon oil tank capacity



TRAXX RC75 Head Attachments

HEAVY DUTY GRASS FLAIL



Technical Specifications
- Choice of grass cutting flails or hammer flails
- Full width rear roller
- Hydraulic front hood
- 2” cutting capacity
- up to 3” cutting height
- +/- 14 degree head angling and flotation
- 3000 RPM rotor speed
- 375lbs weight



63" Flail Head



75" Flail Head

MULCHER WITH PUSH BAR

Technical Specifications
- 63” Cutting width
- Ultra duty heavy duty hammer flails
- Unique high-performance rotor allows flails to swing through 360 degrees
- Hydraulic front hood
- Reinforced steel push bar
- 4” cutting capacity
- 3000 RPM rotor speed
- +/- 14 degree head angling and flotation
- 692lbs weight



FIXED TOOTH FORESTRY FLAIL WITH PUSH BAR

Technical Specifications
- 63” Cutting width
- Hard-wearing tungsten carbide fixed teeth
- Hydraulic front hood
- Reinforced steel push bar
- 4” cutting capacity
- 3000 RPM rotor speed
- +/- 14 degree head angling and flotation
- 782lbs weight



FRONT BUCKET

Technical Specifications
- 51” Working width
- Heavy-duty build
- 1137lbs lifting capacity (heavy duty model
- 996lbs lifting capacity (standard duty model)
- Ideal for work in quarries, culverts, and construction sites



SNOW BLADE

Technical Specifications
- 67” working width
- Hydraulically adjustable blade angle
- Choice of standard plastic blade or optional steel blade
- 23” blade height
- +/- 20 degree blade oscillation
- +/- 14 degree head angling and flotation
- Replaceable blade edge
- 209lbs weight (plastic model)
- 374lbs weight (steel model)



GOVERNMENT SOLUTIONS

Through cooperative purchasing programs, government agencies can acquire Alamo Industrial equipment quickly and confidently while continuing to receive the personalized support of trusted local dealers.

Alamo Industrial

Sourcewell - Contract No. 032525-AGI
Canoe Canada - Contract No. 070821-AGI 032525-AGI
Buy Board - Contract No. 806-26
NASPO - Contract No. 61514
GSA - Contract No. GS-03F-113DA

GENUINE OEM PARTS

Alamo Group Municipal Mowing Solutions replacement parts meet the rigid guidelines necessary to satisfy warranty requirements.

Using anything less means you aren't maintaining the structural, operational, and safety integrity of your equipment. It is the owner's responsibility to ensure the equipment is maintained in compliance with these safety standards.

Our OEM replacement parts are specifically designed for peak performance of your Alamo Industrial, Terrain King, Mantis, and Tiger mowing and trimming equipment.

We design and build to exact specifications requiring strict chemical strength and performance characteristics. Imitation parts may not function properly because they are reversed engineered.

AGMMS parts are tested to meet SAE and ASAE safety standards. We take pride in manufacturing quality parts that consistently test above and beyond the industry standards.

AGMMS parts experts are always available to answer any questions you have. Unlike imitators, they possess the knowledge of and have first-hand experience with our complete line of equipment.

CONTACT US

Alamo Industrial
1502 E. Walnut St.,
Seguin, TX 78155
800-882-5762 | alamo-industrial.com

Municipal Mowing Solutions

©2026 Alamo Group or its affiliates. 2026 Alamo Group Municipal Mowing Solutions All rights reserved. This information is intended to be of a general nature only; specifications are subject to change without notice as we continue to improve our products.
Warranty: One year limited parts and labor. Non-governmental users are subject to modified policy. Only genuine AGMMS parts should be used for warranty replacement.